BER-VAC

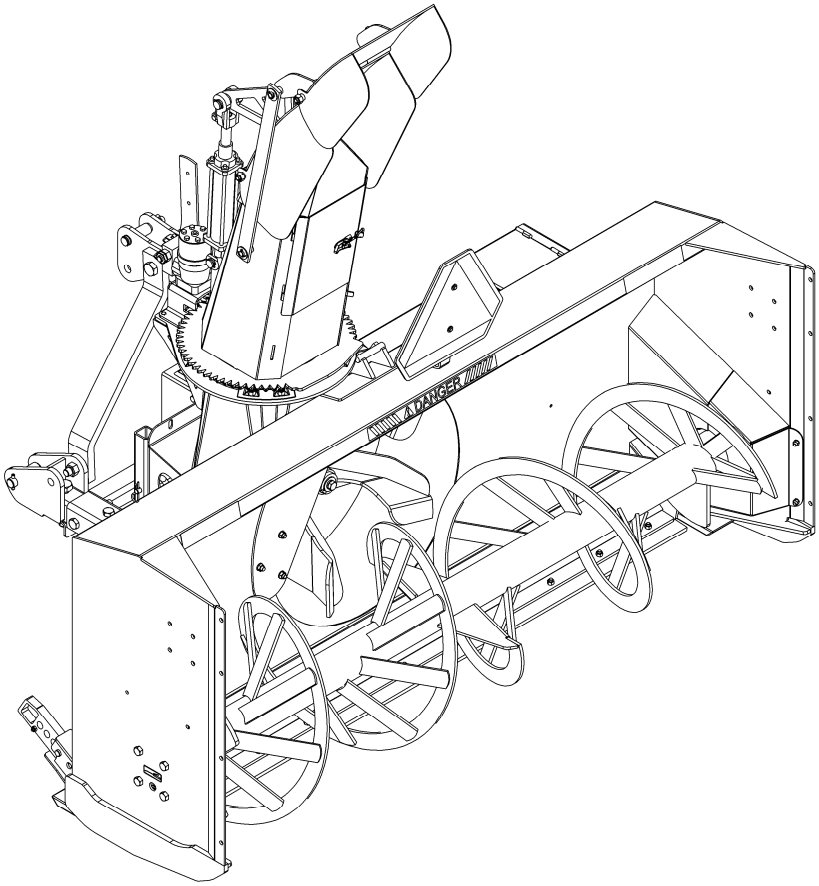

OPERATOR'S AND PARTS MANUAL

SA88B - 88" SNOWBLOWER

SERIAL NO. 21600001 AND UP

INTERTEK
ISO 9001:2000

OM 0440SB88-A
rev3 10-16

TABLE DES MATIÈRES

SPECIFICATIONS 3

INTRODUCTION – TO THE PURCHASER 4

SAFETY PRECAUTIONS 5-10

- General Information 5
- Notice 6
- The Snowblower 6
  - Before Operation 6
  - Snowblower Operation 6
  - Stay Clear of Rotating Drivelines 8
- The Tractor 9
  - General Information 9
  - Operating the Tractor 9
  - During Operation 9
- Maintenance 9
- Transportation 10
- Storage 10

SAFETY DECALS 11-12

ASSEMBLY 13-28

- Tractor Preparation 13
- Snowblower Assembly 13
  - Installation of SMV Sign 13
  - Installation of Three Point Hitch 14
  - Installation of the **BER0085** or **BER0086** Chute, and the Hydraulic Rotation 15
  - Installation of the **BER0087** Hydraulic Deflector for 2 part Chute 16
  - Installation of the Hydraulic Hoses 17
    - A- Hoses of the chute rotation 17
    - B- Hoses of the chute deflector 17
  - Installation of Second Auger - **BER0102** 19
  - Installation of Serrated Auger **BER0106** 20
  - Installation of Drift Cutters - **BER0088** 21
  - Installation of Stainless Skid Shoes **- BER0101** 21
  - Installation of Snowblower with Three Point Hitch 22
  - Preparation of the driveline 23
    - Recommendations for driveline angles 23
    - Angles at Each End of Driveline 23
    - Determining Driveline Length 24
  - Driveline Installation 26
  - Removing Snowblower from Tractor 26

TABLE DES MATIÈRES

OPERATION 27-29
General Preparation 27
Operating Controls 27
Raising and Lowering the Snowblower 27
Work and Travel Speed 27
PTO Operation 27
Chute Rotation Orientation 27
Hydraulic Chute Deflector Orientation 27
Adjustments 28
Manual Deflector Adjustment 28
Skid Shoe Adjustment 28
Chute Door Adjustment 28
Snow Removal Methods 29

MAINTENANCE 30-35
Maintenance 30
Driveline 30
Shearbolts 30
Driveshaft 30
Driveline 30
Chain Idler Adjustment 31
Lubrication 32
Driveline – Troubleshooting 33

PARTS 36-51
Introduction 36
Manual Holder 36
Chain Idler 37
Snowblower Assembly – Front Part 38
Snowblower Assembly – Rear Part 40
Three Point Hitch 42
Hydraulic rotation 44
Gearbox - COMER 45
Gearbox - other 46
Driveline 47
BER0085 - Two Part Chute 48
BER0086 - Three Part Chute 49
BER0087 - Hydraulic Deflector 50
BER0102 - Second Auger 51
Other Options: **Drift Cutters** - **Stainless Skid Shoes** -
Cutting Edges CHT400, Tivar, Stainless – **Serrated Auger** 52

TORQUE SPECIFICATION TABLE 53

SPECIFICATIONS

Specifications	SA88
General	
Type	2 phases
Direction of impeller rotation	CCW
PTO power requirements	55 - 85 Hp
Shipping weight (without chute)	1531 Lbs
Operating weight, incl. chute & hyd. deflect.	1607 Lbs
Set-up time	90 min
Working width	88 1/2"
Working height	41"
Overall width	88 1/2"
Overall height (without chute)	42 1/2"
Overall height (with three part chute closed)	81"
Overall length	59"
Impeller	
Impeller diameter	28"
Impeller width	12"
Number of impeller blade	4
Impeller shaft diameter	1 9/16"
Impeller RPM	540 RPM
Auger	
Auger - Single / dual	Single (dual in option)
Main auger diameter	23"
Auger driven system	Chain No.80
Second auger diameter	14"
Second auger driven system	Chain No.60
Auger RPM	185 RPM
Drum	
Rotating drum	No
Rotation of drum	N/A
Flow restrictor	N/A
Housing	
Housing thickness	11 Ga.
Side panel thickness	1/4"
Impeller housing thickness	1/4"
Chute	
Chute position	Right
Rotation of the chute	Hydraulic by motor
Flow restrictor (rotation)	Yes
Flow restrictor (deflector)	Yes
Hoses support	Yes
Deflector adjustment (2 part chute)	Manual (hydraulic in option)
Deflector adjustment (3 part chute)	Hydraulic
Cutting edge	
Replaceable and reversible cutting edge	Yes
Cutting edge material	Carb.steel (other mater.available)
Cutting edge dimension	1/2" x 4"
Skid shoe	
Replaceable and reversible skid shoe	Yes, 8 positions
Skid shoe material	Stand.steel (other mater.available)
Drive and hitch	
Main driving system	Driveline series 60
Chain idler	Twin sprokets w/compress.spring
Parking stand	Yes
Number of auger shear bolt	1 (on the driving shaft)
Number of impeller shear bolt	1 (on the driveline)
Type of hitch	3 pts, cat. 2

INTRODUCTION

TO THE PURCHASER

All products are designed to give safe, dependable service if they are operated and maintained according to instructions. **Read and understand this manual before operation.**

This manual has been prepared to assist the owner and operators in the safe operation and suitable maintenance of the implements. The information was applicable to products at the time of manufacture and does not include modifications made afterwards.

Read and understand this operator's manual before attempting to put an implement into service. Familiarize yourself with the operating instructions and all the safety recommendations contained in this manual and those labeled on the implements and on the tractor. Follow the safety recommendations and make sure that those with whom you work follow them.

Illustrations

The illustrations may not necessarily reproduce the full detail and the exact shape of the parts or depict the actual models, but are intended for reference only

Direction Reference

Right Hand and Left Hand are determined by those seen by the conductor standing behind the equipment.

The Dealer is responsible for warranty registration of the unit you have purchased. To assist your dealer in handling your needs, please record hereafter the model number and serial number of your implement and tractor. It is also advisable to supply them to your insurance company. It will be helpful in the event that an implement or tractor is lost or stolen.

MODEL : _____

SERIAL NUMBER : _____

DATE OF PURCHASE : _____

SAFETY PRECAUTIONS

SAFETY FIRST

This symbol, the industry's "Safety Alert Symbol", is used throughout this manual and on labels on the machine itself to warn of the possibility of personal injury. Read these instructions carefully. It is essential that you read the instructions and safety regulations before you attempt to assemble or use this unit.

DANGER : Indicates an imminently hazardous situation which, if not avoided, will result in death or serious injury.

WARNING : Indicates a potentially hazardous situation which, if not avoided, could result in death or serious injury.

CAUTION : Indicates a potentially hazardous situation which, if not avoided, may result in minor or moderate injury.

IMPORTANT : Indicates that equipment or property damage could result if instructions are not followed.

NOTE : Gives helpful information.

All products are designed to give safe, dependable service if they are operated and maintained according to instructions. **Read and understand this manual before operation**. It is the owner's responsibility to be certain anyone operating this product reads this manual, and all other applicable manuals, to become familiar with this equipment and all safety precautions. Failure to do so could result in serious personal injury or equipment damage. If you have any questions, consult your dealer.

BEFORE OPERATION

Children and Bystanders

Tragic accidents can occur if the operator is not alert to the presence of children. Children are generally attracted to machines and the work being done. Never assume children will remain where you last saw them.

1. Keep children out of the operating area and under the watchful eye of another responsible adult.
2. Be alert and turn machine off if children enter the work area.
3. Before and when backing, look behind and look for small children.
4. Never carry children while operating the machine. They may fall off and be seriously injured or interfere with safe operation of the machine.
5. Never allow children to play on the machine or attachment even when turned off.
6. Never allow children to operate the machine even under adult supervision.
7. Use extra care when approaching blind corners, shrubs, trees, or other obstructions that might hide children from sight.

NOTICE

A safe operator is the best insurance against accidents. All operators, no matter how experienced they may be, should read this Operator's Manual and all other related manuals before attempting to operate an implement. Please read the following section and pay particular attention to all safety recommendations contained in this manual and those labeled on the implements and on the tractor.

THE SNOWBLOWER

Before Operation

1. Read and understand this operator's manual and tractor operator's manual. Know how to operate all controls and how to stop the unit and disengage the controls quickly.

2. Never wear loose, torn, or bulky clothing around the tractor and implement. It may catch on moving parts or controls, leading to the risk of accident.

3. Before the snow season, thoroughly inspect the area where the equipment is to be used and remove all doormats, sleds, boards and other foreign objects.

4. Disengage clutch and shift into neutral before starting the engine.

5. Do not operate equipment in wintertime without wearing adequate winter garments.

6. Never attempt to make any adjustments while engine is running. Read this manual carefully to acquaint yourself with the equipment as well as the tractor operator's manual. Working with unfamiliar equipment can lead to accidents. Be thoroughly familiar with the controls and proper use of the equipment. Know how to stop the unit and disengage the controls quickly.

7. Keep all shields in place and properly tighten all mounting hardware.

8. Periodically, inspect all moving parts for wear and replace with authorized service parts if an excessive amount of wear is present.

9. Replace all missing, illegible, or damaged safety and warning decals. See list of decals in the operator's manual.

10. Do not modify or alter this equipment or any of its components, or any equipment function without first consulting your dealer.

11. Keep safety decals clean of dirt and grime.

12. Make sure the tractor is counterweighted as recommended by your dealer. Weights provide the necessary balance to improve stability, traction and steering.

Snowblower Operation

1. Before leaving the tractor/snowblower unattended, take all possible precautions. Park the tractor/snowblower on level ground, place the transmission in neutral, set the parking brake, disengage the PTO, lower the snowblower to the ground, place all levers including auxiliary control levers in neutral, shut off the engine and remove the ignition key.

2. Before starting the tractor/ snowblower, remove the ice that might have accumulated on the auger/fan, inspect and clean every rotating part.

3. Prior to operation, clear work area of all objects that can be picked up and thrown. Mark all curbs, pipes, etc. that cannot be moved.

4. Be sure the PTO switch/lever is in OFF/disengaged position before starting engine.

5. Exercise extreme caution when operating on or crossing a gravel drive, walks, or roads. Stay alert for hidden hazards or traffic.

6. Do not carry passengers.

7. Keep clear of all rotating parts. Do not put hands or feet under, or into snowblower with engine running. Be especially observant of the snowblower areas of discharge, intake or all other mechanical motions.

8. For your safety, do not work under any hydraulically supported machine elements that may creep down, suddenly drop or be accidentally lowered.

9. Park the tractor/snowblower on level ground, place the transmission in neutral, set the parking brake, disengage the PTO, lower the snowblower to the ground, place all control levers in neutral, shut off the engine, remove the ignition key and allow the rotating parts to stop BEFORE unclogging the housing or the chute and making any repairs, adjustments or inspections. Use only a 36" long stick of wood to unclog the snowblower.

10. If the snowblower starts to vibrate abnormally, disengage the PTO, stop the engine immediately and check for cause. Excessive vibration is generally a sign of holeble.

11. Do not run the engine indoors except when starting engine and transporting attachment in or out of building. Carbon monoxide gas is colorless, odorless and deadly.

12. Do not attempt to operate on steep slopes. If operating on slopes is necessary, exercise extreme caution when changing direction.

13. Never operate snowblower without guards, and other safety protective devices in place. All tractor and snowblower shields and covers must be correctly installed at all times. When necessary to remove these, they must be reinstalled immediately.

14. Never operate snowblower near glass enclosures, automobiles, window wells, embankments, etc., without proper adjustment of snow discharge angle.

15. Never operate machine at high transport speeds on a slippery surface.

16. Use extra caution when backing up.

17. Disengage power to auger/fan when transporting or when not in use.

18. Never operate the snowblower without good visibility and lighting.

19. Prolonged exposure to loud noise can cause impairment or loss of hearing. Wear a suitable hearing protective device such as earmuffs or earplugs to protect against objectionable or uncomfortable noises.

20. Never allow anyone near the work area.

21. Never allow anyone to operate the snowblower until they have read the manual completely and are thoroughly familiar with basic tractor and snowblower operation.

22. Make sure the tractor is counterweighted as recommended by your dealer. Weights provide the necessary balance to improve stability, traction and steering.

23. Always make sure all snowblower components are properly installed and securely fastened BEFORE operation.

24. Adjust housing height to clear gravel or crushed rocks surface.

25. Keep away from chute discharge. This chute has the capacity to throw debris at far distances.

26. Never direct chute discharge towards people or animals. A thrown debris can cause serious injury.

Stay Clear of Rotating Drivelines

1. Entanglement in rotating driveline can cause serious injury or death.
2. Keep tractor master shield and driveline shields in place at all times. Make sure rotating shields turn freely.
3. Wear close fitting clothing. Stop the engine and be sure that PTO driveline is stopped before making adjustments, connections, or cleaning out PTO driven equipment.
4. Do not install any adapter device between the tractor and the primary implement PTO drive shaft that will allow a 1000 rpm tractor shaft to power a 540 rpm implement at speeds higher than 540 rpm.
5. To use the blower with PTO at 1000 rev / min, see your dealer to install the appropriate set of gear.
6. Do not install any adapter device that results in a portion of the rotating implement shaft, tractor shaft, or the adapter to be unguarded. The tractor master shield shall overlap the end of the splined shaft and the added adaptor device as outlined in the table.

PTO Type	Diameter	Splines	n ± 5 mm (0.20 in.)
1	35 mm (1.378 in.)	6	85 mm (3.35 in.)
2	35 mm (1.378 in.)	21	85 mm (3.35 in.)
3	45 mm (1.772 in.)	20	100 mm (4.00 in.)

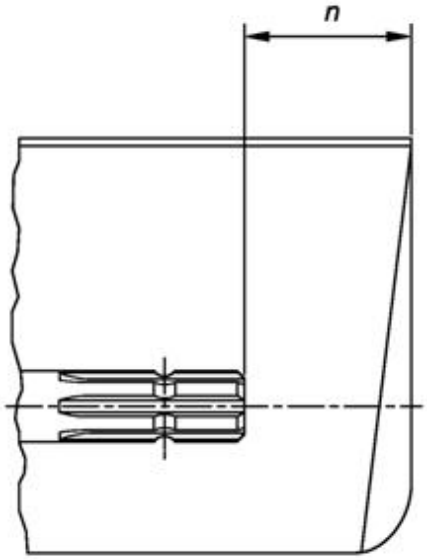

THE TRACTOR

General Information

1. Read the operator's manual carefully before using tractor. Lack of operating knowledge can lead to accidents.
2. Do not allow anyone but the operator to ride on the tractor. There is no safe place for extra riders

Operating the Tractor

1. Never run the tractor engine in a closed building without adequate ventilation, as the exhaust fumes are very dangerous.
2. Never allow an open flame near the fuel tank or battery.
3. Make sure the shield is installed when using a PTO-driven equipment and always replace the shield if damaged.
4. Always bring the tractor to a complete stop, shut off the engine, lower the implement to the ground and remove the ignition key before leaving the tractor.
5. Never park the tractor on a steep slope.
6. Do not attempt to operate on steep slopes.
7. Use of tire chains for better traction and stability is recommended.
8. Always drive the tractor at speeds compatible with safety, especially when operating over rough ground, crossing ditches, or when turning.
9. Handle fuel with care, as it is highly flammable.
10. Use approved fuel container.
11. Never add fuel to a running engine or a hot engine.
12. Fill fuel tank outdoors with extreme care. Never fill fuel tank indoors. Replace fuel cap securely and wipe up spilled fuel.
13. Never allow anyone to operate the snowblower until they are thoroughly familiar with basic tractor and snowblower operation.
14. A minimum 20% of tractor and equipment weight must be on the tractor front wheels when attachments are in transport position. Without this weight, tractor could tip over, causing personal injury or death. The weight may be attained with a loader, front wheel weights, ballast in tires or front tractor weights. Weigh the tractor and equipment. Do not estimate.
15. Always make sure all snowblower components are properly installed and securely fastened BEFORE operation.

During Operation

1. Do not allow anyone to ride on the tractor/snowblower at any time. There is no safe place for passengers on this equipment. The operator MUST sit in the tractor seat.
2. Eye and hearing protection is recommended when operating the snowblower.
3. Operate only during daylight hours, or when the area is well lit with bright artificial light.
4. Disengage the PTO (turn to “OFF”), place the transmission in neutral, set the parking brake, shut off the engine and remove the key, and make sure rotating components have stopped BEFORE leaving the operator’s seat.
5. Inspect the snowblower after striking any foreign object to assure that all snowblower parts are safe and secure and not damaged.

MAINTENANCE

ALWAYS USE GENUINE PARTS WHEN REPLACEMENT PARTS ARE REQUIRED

1. Keep the tractor and snowblower properly maintained.
2. Park the tractor and snowblower on level ground, place the transmission in neutral, set the parking brake, disengage the PTO, lower the snowblower to the ground, place all control levers in neutral, shut off the engine and remove the ignition key and allow the rotating parts to stop BEFORE making any snowblower adjustments.
3. To avoid injury, do not adjust, unblock the driving system, or service the snowblower with the tractor engine running. Make sure rotating components have completely stopped BEFORE leaving the operator's seat.
4. Keep the tractor and snowblower clean. Snow, dirt or ice build-up can lead to malfunction or personal injury from thawing and refreezing in garage.
5. Always wear eye protection when cleaning or servicing the snowblower.
6. DO NOT service the tractor while the engine is running or hot, or if the unit is in motion. Always lower snowblower to the ground. If necessary to service snowblower in raised position, securely support with stands or suitable blocking before working underneath. Do not rely on hydraulically supported devices for your safety. They can settle suddenly, leak down, or be accidentally lowered.
7. Do not attempt to service machine, clear obstructions or unclog the snowblower with the engine running. Always shut off engine and allow all motion to cease.
8. The manufacturer will not claim responsibility for fitment of unapproved parts and/or accessories and any damages as a result of their use.
9. Make sure all shields and guards are securely in place following all service, cleaning, or repair work.
10. Do not modify or alter this snowblower or any of its components or operating functions. If you have questions concerning modifications, consult with your dealer.
11. Do not operate a snowblower that is defective or has missing parts. Make sure that all recommended maintenance procedures are completed before operating the snowblower.
12. Check all controls regularly and adjust where necessary. Make sure that the brakes are evenly adjusted.
13. Periodically check all nuts and bolts for tightness, especially wheel hub and rim nuts.
14. To avoid serious personal injury: Escaping hydraulic/diesel fluid under pressure can penetrate the skin causing serious injury. Do not use your hands to check for leaks. Use a piece of cardboard or paper to search for leaks. If you are injured by escaping high pressure fluid, see a medical doctor at once.
15. Stop engine and relieve pressure before connecting or disconnecting hydraulic hoses. Tighten all connections before starting engine or pressurizing hoses.

TRANSPORTATION

1. If the tractor/snowblower is to be driven on public roads, it must be equipped with an SMV (Slow Moving Vehicle) sign. Check local traffic codes that may apply to unit usage on public roads and highways in your area.
2. Be alert for all other traffic when driving the tractor/snowblower on public roads or highways.

STORAGE

1. Before storing the snowblower, certain pre-cautions should be taken to protect it from deterioration.
2. Clean the snowblower thoroughly.
3. Make all the necessary repairs.
4. Replace all Safety Signs that are damaged, lost, or otherwise become illegible. If a part to be replaced has a sign on it, obtain a new safety sign from your dealer and install it in the same place as on the removed part.
5. Repaint all parts from which paint has worn or peeled.
6. Lubricate the snowblower as instructed under "Lubrication" section.
7. When the snowblower is dry, oil all moving parts. Apply oil liberally to all surfaces to protect against rust.
8. Attach driveline shield safety chain around driveline by passing it over the upper hitch.
9. Store in a dry place.

SAFETY DECALS

Replace immediately if damaged

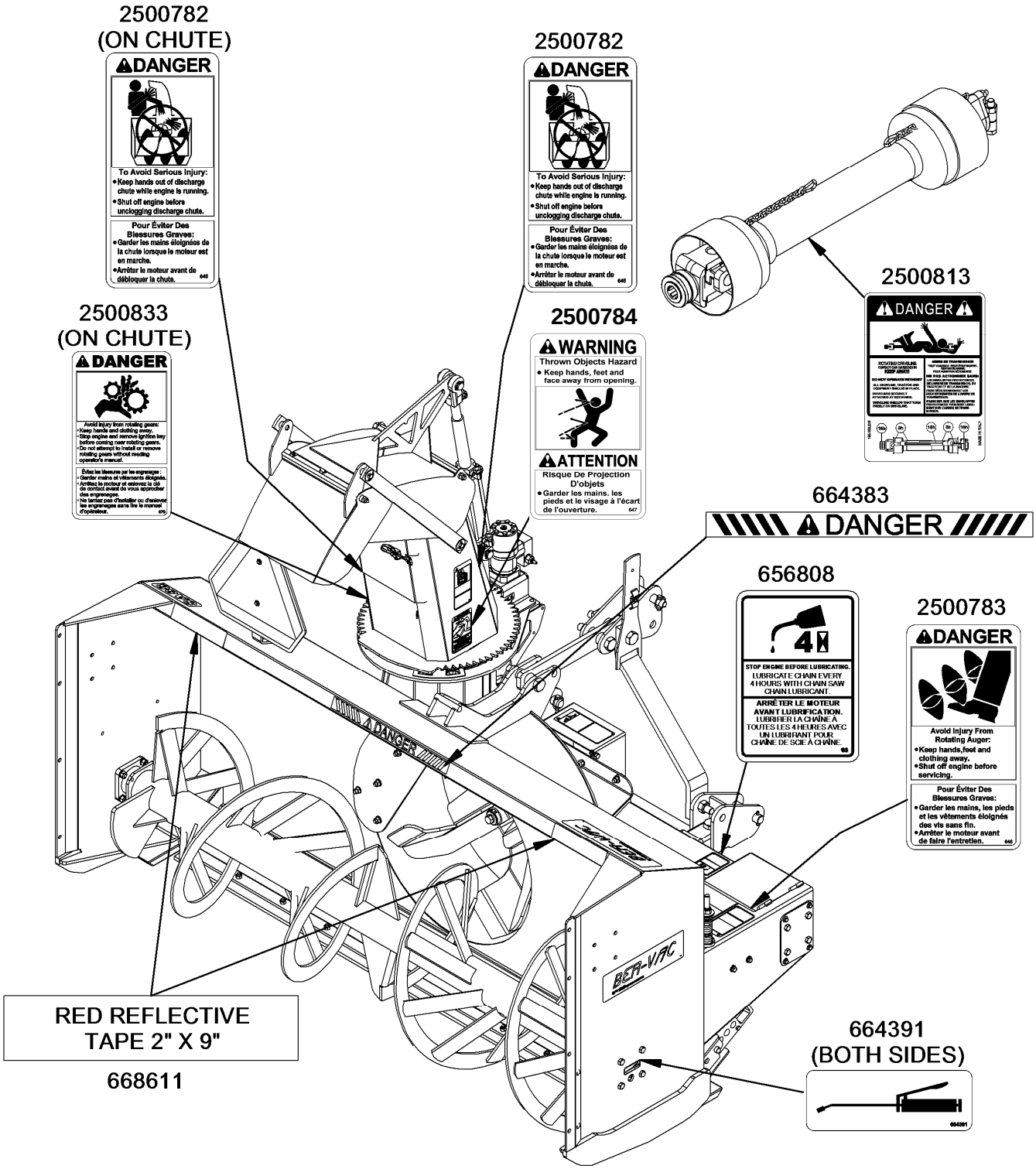

SAFETY DECALS

Replace immediately if damaged

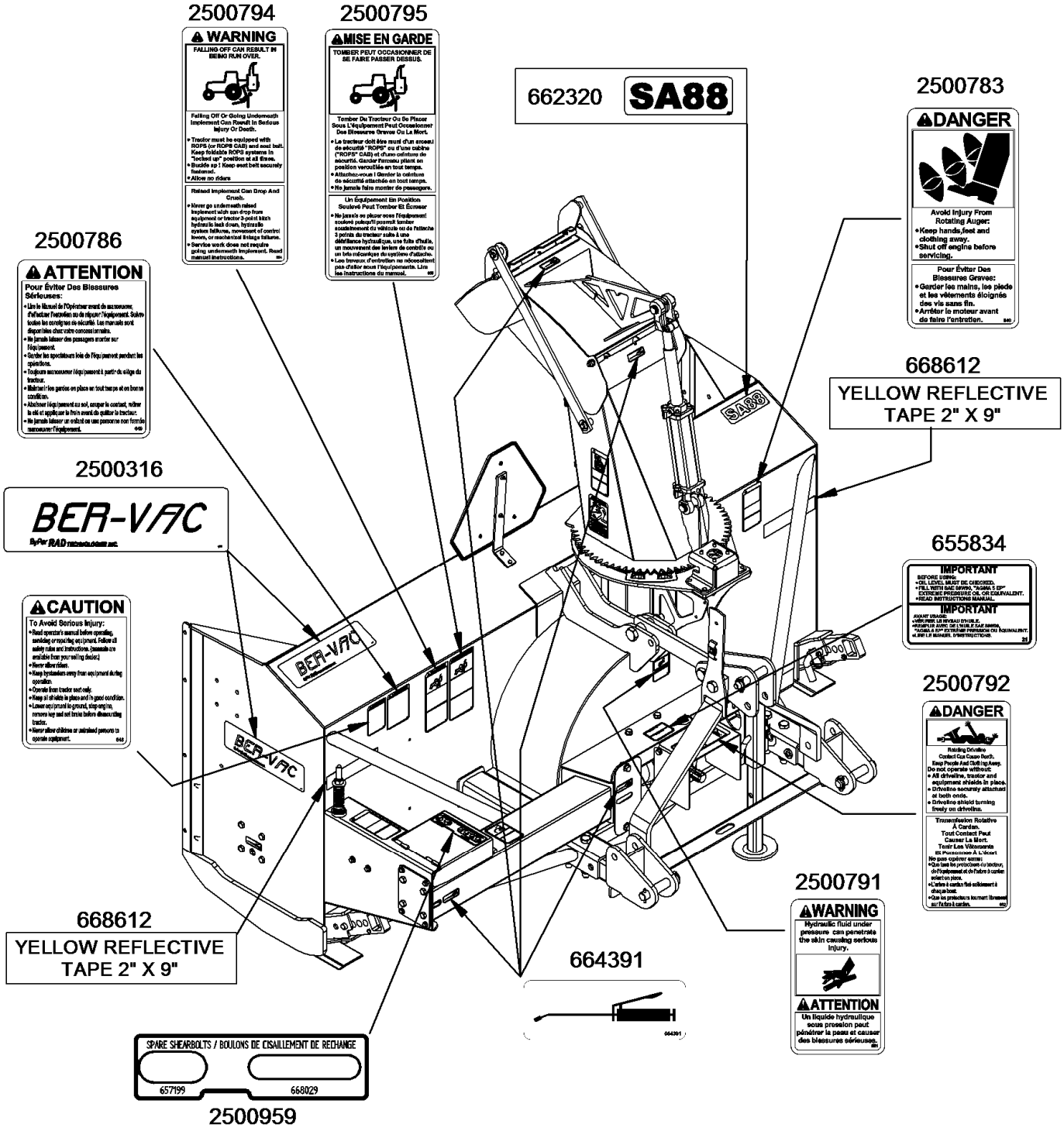

ASSEMBLY

TRACTOR PREPARATION

See Dealer for Tractor Preparation information.

SNOWBLOWER ASSEMBLY

The snowblower is assembled at the factory except for the parts in the hardware bag provided with the snowblower, the chute and the options if appropriate. Use the present manual and lay out all parts for assembly. Separate bolts and nuts into various sizes. After assembly, torque all the bolts according to the ***Torque Specification Table*** at the end of the manual.

Installation of the Slow Motion Vehicle Sign (if not installed)

(Figures 1-2)

1. **Figure 1:** Remove the two 1/4"NC x 1" bolts, flat washers and nylon insert lock nuts (items 2-3-4) that hold the SMV sign (item 1) to the frame. Keep hardware.
2. **Figure 2:** Reinstall the support of the SMV sign (item 1) on the snowblower, as shown in figure, with the two 1/4"NC x 1" bolts, flat washers and nylon insert lock nuts (items 2-3-4).

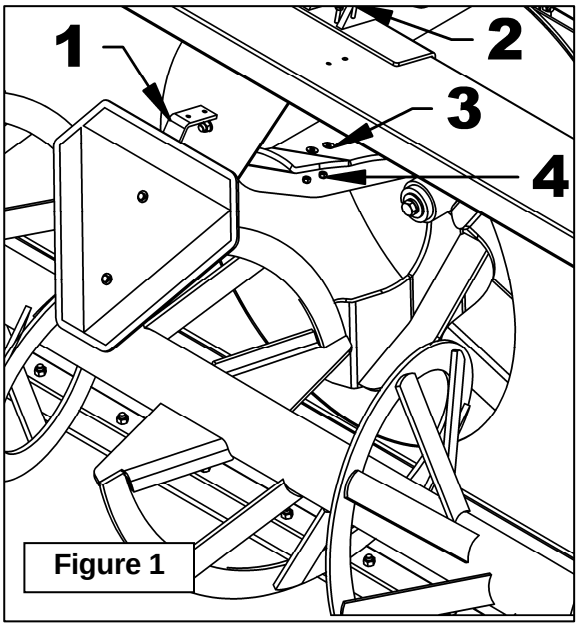

Figure 1

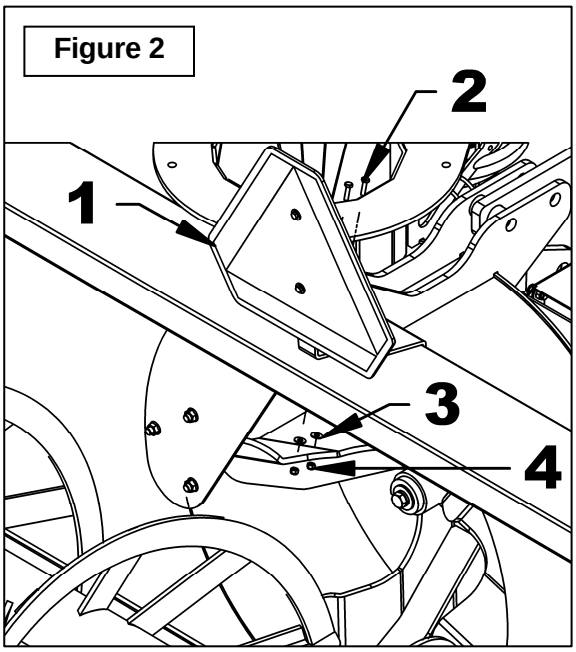

Figure 2

Installation of Three Point Hitch *(Figures 3-4)*

NOTE: Do not tighten the bolts during assembly. The bolts are tightened to the last step.

NOTE: The three point hitch can be installed in two positions; close to the tractor or distant.

- **A close adjustment gives better handling for the tractor and snowblower, but decreases the life of the PTO shaft.**
- **A distant adjustment increases the life of the PTO shaft, but less maneuverability.**

NOTE: The hardware used in the packaging of the 3-point hitch will be reused for assembly below.

1. **Figure 3:** Install the lower hitches (item 1) on snowblower using two reinforcement plates (item 2) under the each hitches and secure with six 3/4"NC x 5 1/2" bolts, 3/4" lockwashers and 3/4" nylon insert lock nuts (items 3-4-5).
2. **Figure 3:** Install the brace (item 6) under the lower hitches (item 1) with two 7/8" NC x 5" bolts (item 7), lockwashers and nylon insert nuts (items 8-9).
3. **Figure 4:** Attach the right and left hitches (items 1-2) to the lower hitches (figure 3, items 1) as illustrated. Secure with two 7/8"NC x 2 1/2" bolts and stover lock nuts (items 3-4).
4. **Figure 4:** Attach the upper hitch (item 5) to the snowblower using a 7/8" NC x 5" bolt and a 7/8" stover lock nut (items 6-7).
5. **Figure 4:** Attach each right and left hitches (items 1-2) to the upper hitch (item 5) with a 7/8"NC x 5" bolt and 7/8" stover lock nut (items 6-7).
6. **Figure 4:** Attach the hose support (item 9) to the left hitch (item 1) and the upper hitch (item 5) as illustrated using a 7/8"NC x 6" bolt and 7/8" stover lock nut (items 8-7).
7. Tighten all bolts.

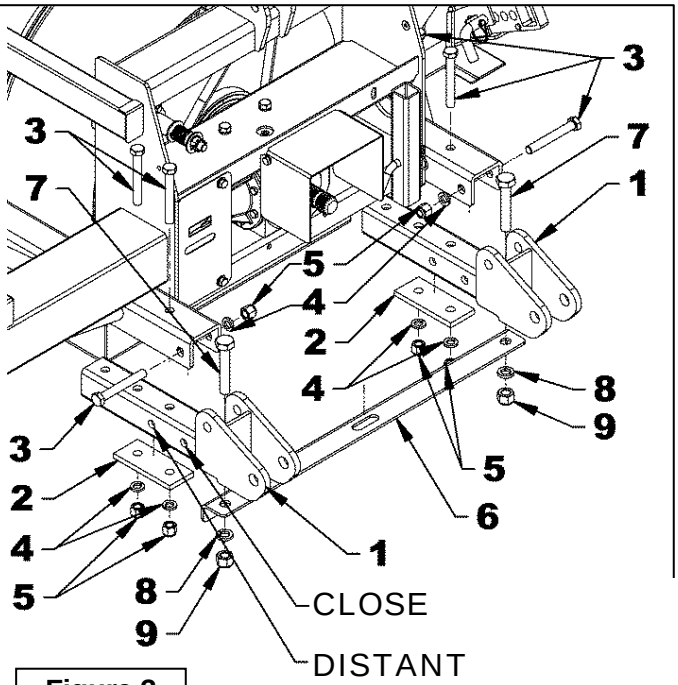

Figure 3

Figure 4

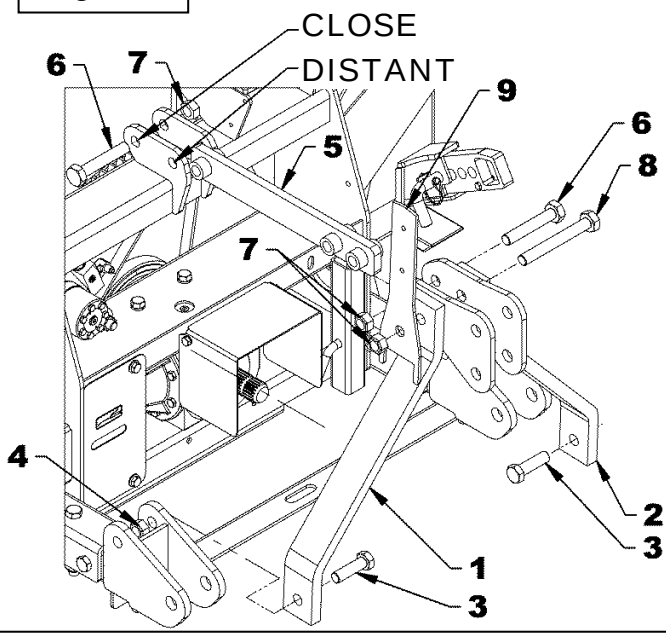

Installation of the BER0085 or BER0086 Chute, and the Hydraulic Rotation

(Figures 5-6-7-8)

1. **Figure 5:** Remove the motor of the rotation (item 1) from its transport location by removing the hardware: bolts, flat washers, nylon insert lock nuts (items 2-3-4). Those attaching items will not be reused.
2. **Figure 5:** Cut the nylon tie wrap (item 5) and remove the two anti-friction plates (item 6).
3. **Figure 6:** Assemble the two anti-friction plates (item 2) and place on the frame of the snowblower so that they are centered with the output of the drum.
4. **Figure 6:** Place the chute (item 1) on the anti-friction plate's assembly (item 2).
5. **Figure 6:** Place the chute guide (item 3) on the chute base (item 1). Then install the retaining plate (item 4) using two 1/2"NC x 1 1/2" bolts, 1/2" lockwashers and 1/2"NC nylon insert lock nuts (items 5-6-7).
6. Repeat the step 5 on the three other corners.
7. **Figure 7:** Make sure the chute is always well centered with the output of the snowblower during the assembly of the other retaining plates. The anti-friction plates (item 2) should not be under the retaining plates.
8. Make sure the motor gear is well attached by checking the tightening of the bolt that secure the gear to the motor.
9. **Figure 8:** Attach the gear protector with the rotation motor (item 1) using four 5/16"NC x 1" serrated flange bolts and 5/16"NC serrated flange nuts (items 2-3).

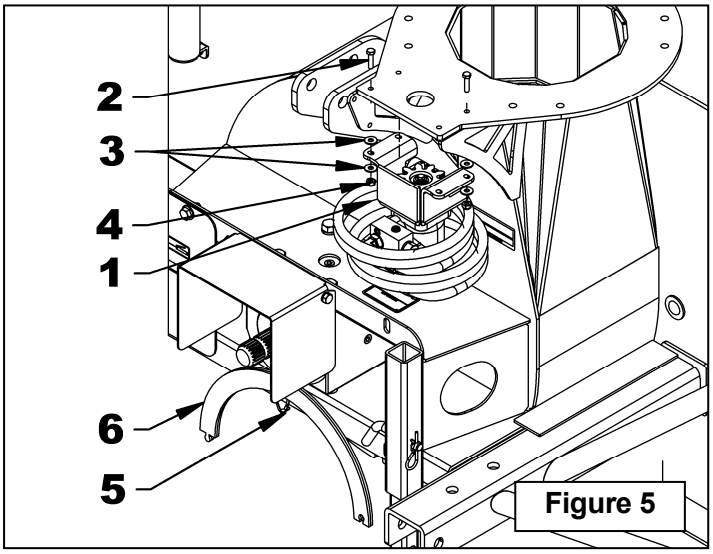

Figure 5

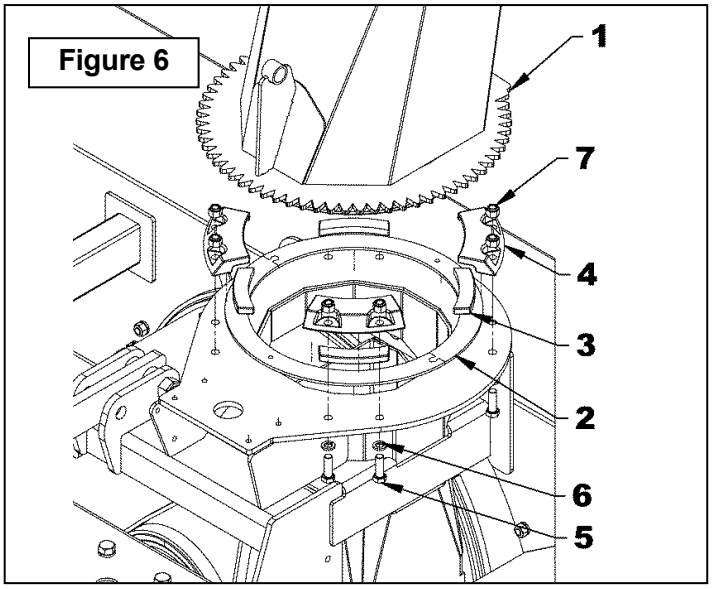

Figure 6

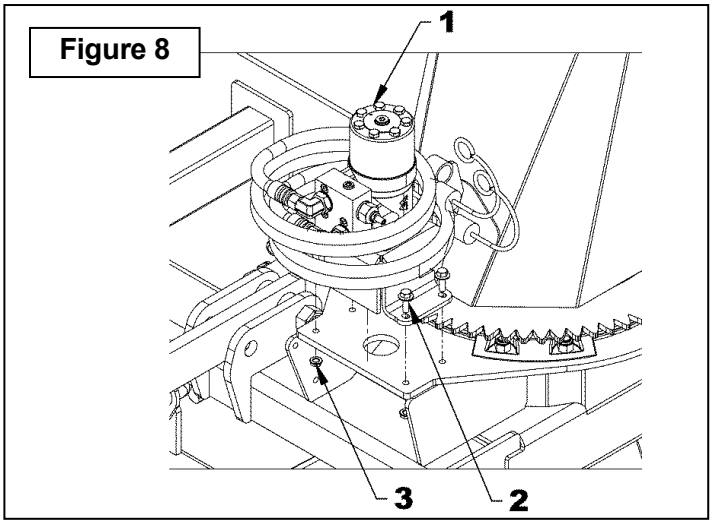

Figure 8

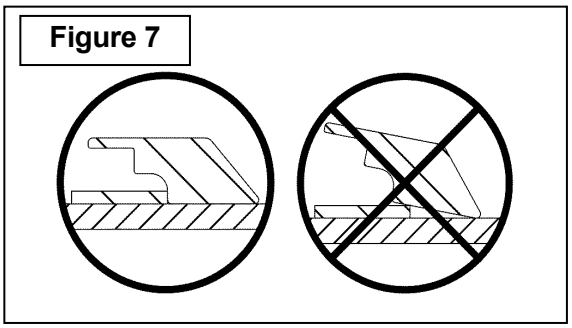
Figure 7

Installation of the BER0087 Hydraulic Deflector for 2 part Chute

(Figures 9-9a)

3. **Figure 9:** Remove a circlip (items 1-4) from each cylinder pin (items 2-3) and remove the pins. Placing the hydraulic ports in the position shown on figure, attach the fixed end of the cylinder (item 6) to the chute base (item 5) and the rod end to the deflector with the pins and circlips.
4. **Figure 9:** Install the male ends of the two elbow flow restrictors on the cylinder ports, pointing up the outputs and at the angles shown in figure.
5. **Figure 9a:** Install a 1/2"NPT quick coupler with a dust cap (items 6-7) at one end of the two hoses.
6. **Figure 9a:** Attach the other end of the hoses (item 2) to the cylinder elbows (items 1).
7. **Figure 9:** Install the hose support (item 7) using two 5/16"NC x 1" serrated flange bolts and 5/16"NC serrated flange nuts (items 8-9).
8. **Figure 9:** Attach the hose clamp (item 11) with a 3/8"NC x 1 1/2" bolt and 3/8"NC nut (items 10 & 12). Do not tighten.
9. **Figure 9a:** Attach hoses (item 2) to the hose support previously installed by running them inside the hose clamp.
10. **Figure 9a:** Attach hoses (item 2) to the hose support located on the three point hitch with the hose clamp (item 4), a 3/8"NC x 1 1/2" bolt and 3/8"NC nut (items 3 & 5).
11. **Figure 9a:** Secure with 1/4" x 15" lg nylon tie wraps to the illustrated locations (items 8).

NOTE: Make sure to leave enough play to the hoses to allow full rotation of the chute and that the radius of curvature of the hoses remains correct. Also make sure they do not cross and they do not rub against sharp edges. Rotate the chute and move the deflector to ensure that hoses are well assembled.

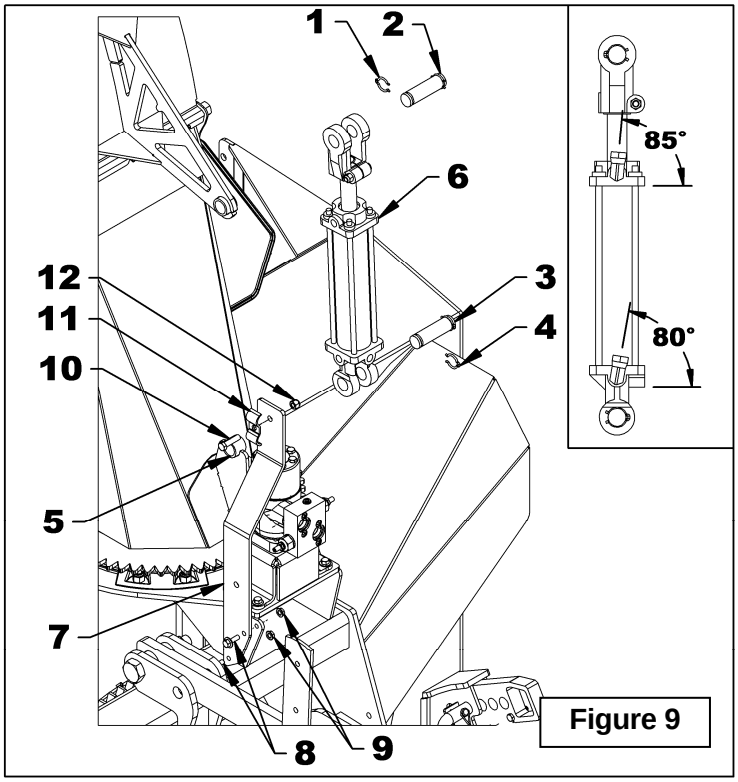

Figure 9

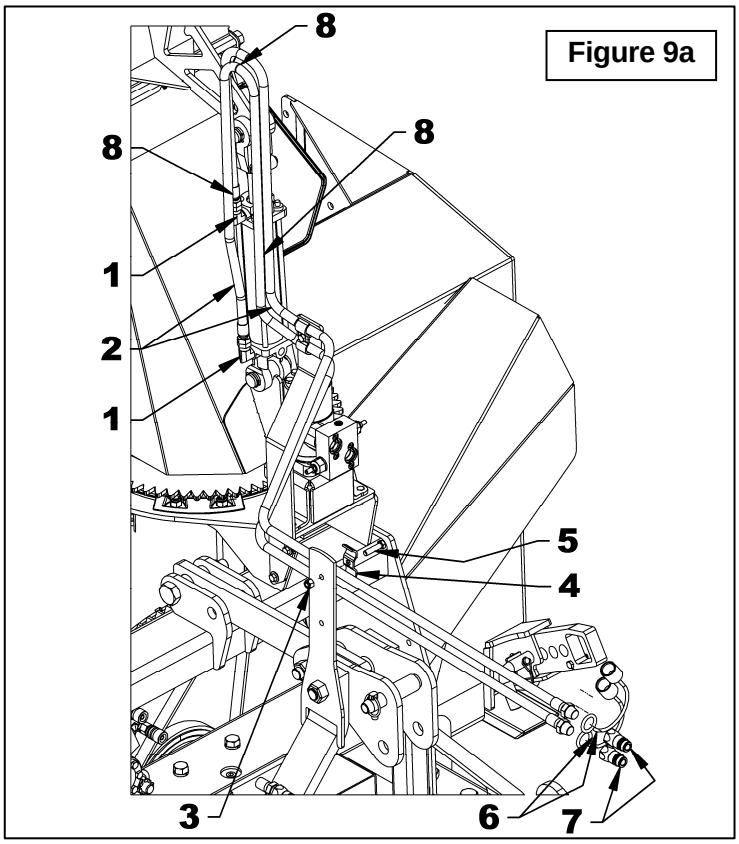

Figure 9a

Installation of the Hydraulic Hoses *(Figures 10-11-11a)*

A- HOSES OF THE CHUTE ROTATION

1. **Figure 10:** Install the hydraulic motor hoses of the chute (item 1) on the hose support in the lower hole.
2. **Figure 10:** Attach the hose clamp using a 3/8"NC x 1 3/4" bolt and a 3/8"NC nylon insert lock nut (items 3-4-5).
3. Make sure the hoses are not too tight between the hydraulic motors and the hose support and do not touch sharp edges.

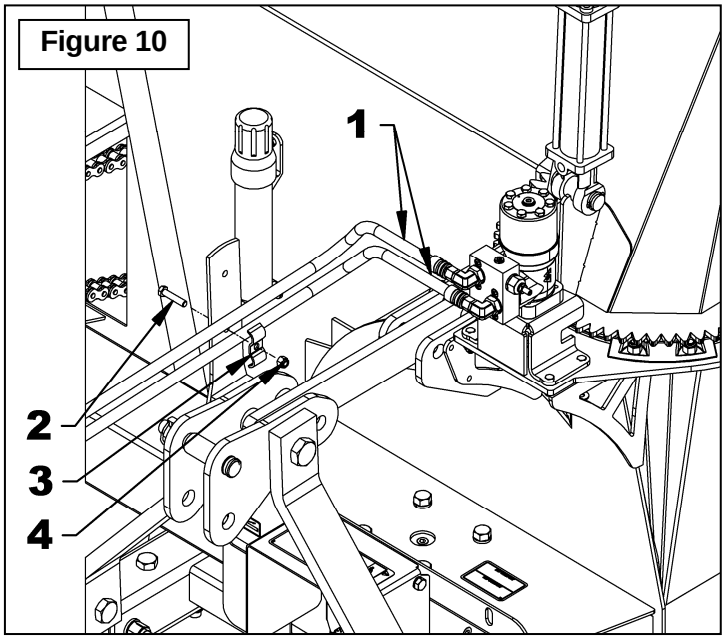

Figure 10

B- HOSES OF THE CHUTE DEFLECTOR (IF NOT INSTALLED)

1. **Figure 11:** Install the hose support (item 7) using two 5/16"NC x 1" serrated flange bolts and 5/16"NC serrated flange nuts (items 8-9).
2. **Figure 11:** Attach the hose clamp (item 11) with a 3/8"NC x 1 1/2" bolt and 3/8"NC nut (items 10, 12). Do not tighten.

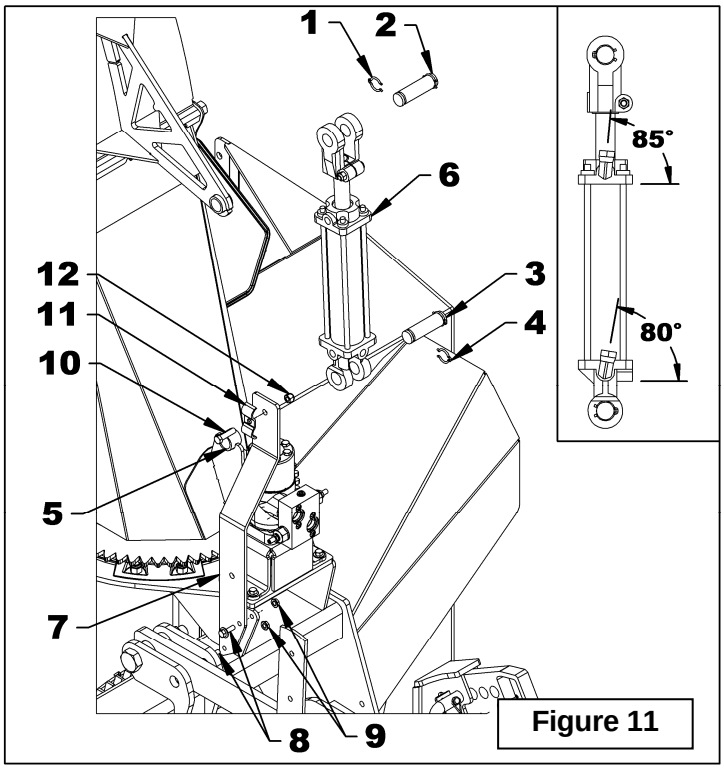

Figure 11

3. **Figure 11a:** Attach hoses (item 2) to the hose support previously installed by running them inside the hose clamp.
4. **Figure 11a:** Attach hoses (item 2) to the hose support located on the three point hitch with the hose clamp (item 4), a 3/8"NC x 1 1/2" bolt and 3/8"NC nut (items 3, 5).
5. **Figure 11a:** Secure with 1/4" x 15" lg nylon tie wraps to the illustrated locations (items 8).

   NOTE: Make sure to leave enough play to the hoses to allow full rotation of the chute and that the radius of curvature of the hoses remains correct. Also make sure they do not cross and they do not rub against sharp edges. Rotate the chute and move the deflector to ensure that hoses are well assembled.

CAUTION:

To avoid serious personal injury. Escaping hydraulic/ diesel fluid under pressure can penetrate the skin causing serious injury.

- **Do not use your hands to check for leaks. Use a piece of cardboard or paper to search for leaks.**

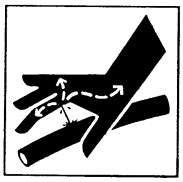

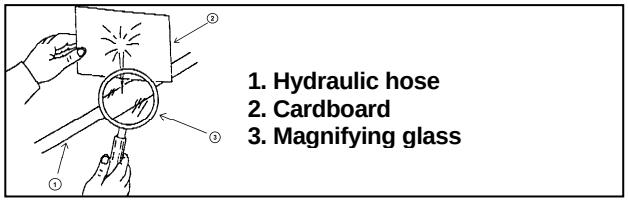

- **Stop engine and relieve pressure before connecting or disconnecting lines.**
- **Tighten all connections before starting engine or pressurizing lines.**

If any fluid is injected into the skin, obtain medical attention immediately or gangrene may result

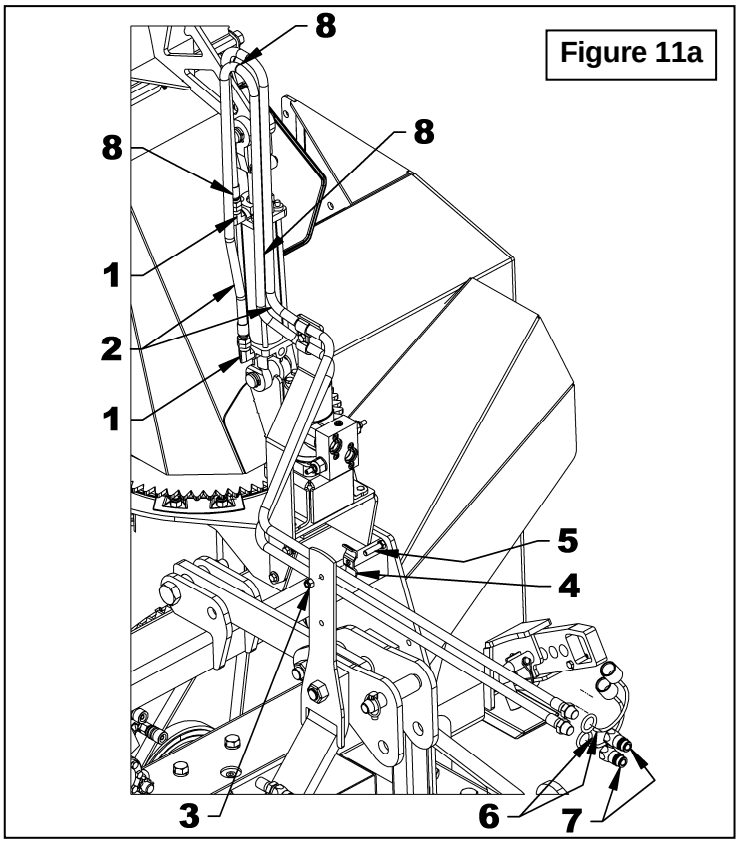

Figure 11a

Installation of Second Auger - BER0102 OPTION *(Figure 12)*

1. Remove the chain guard (item 1) and loosen drive chain as per instructions in the ***Chain Idler Adjustment*** section at page 31 then remove the chain.
2. Remove the 1/2"NC x 1 1/2" bolts that secure the flange bearings (item 2) on each auger side. Remove the auger from the snowblower frame. Remove the flange bearing (item 2) and the spacer (item 27) from the right side of the lower auger (item 4).

   NOTE: The auger can be partially removed by removing completely the right flange bearing bolts, but by giving some play to those of the left flange bearing. In this way, the auger may be moved out of the right side frame for installing the sprocket.
3. Install the idler sprocket (item 13) on the chain idler (item 14), using a 5/8" NC x 3" carriage bolt, a 5/8" flat washer (11/16" hole), a spacer and a 5/8"NC nylon insert lock nut (items 15-25-16-17). Do not tighten. Attach the idler assembly inside the snowblower in the holes already drilled, with two 3/8"NC x 1 1/4" bolts, 3/8" lockwashers and 3/8"NC nuts (items 18-19-20).
4. Install the new sprocket 1 1/4"- 4 1/8" c/c holes (item 24) on the lower auger using four 3/8"NC x 1 1/2" bolts, lockwashers and nylon insert lock nuts (items 6-7-8). Tighten according to the ***Torque Specification Table*** at the end of the manual.
5. On the upper auger, install the sprocket 1 1/4"-3 1/2" c/c holes (item 3) using four 3/8"NC x 1 1/2" bolts, lockwashers and nylon insert lock nuts (items 6-7-8). Tighten according to the ***Torque Specification Table*** at the end of the manual.
6. Reinstall the lower auger (item 4) with the original flange bearings (item 2), the 1/2"NC x 1 1/2" bolts, lockwashers and nuts. Make sure the auger is well seated on the left flange bearing and tighten the setscrews.
7. Install the upper auger (item 5) with the flange bearings (item 9) included with the kit and attach with 1/2" x 1 1/2" bolts lockwashers and nuts (items 10-11-12). Do not tighten the setscrews on the flange bearings.
8. Install the chain as shown in **figure 12**, making sure that the middle pales are placed perpendicular to each other between the two augers as shown in **figure 12a**. Assemble the connecting link by placing the opening opposite the direction of the chain rotation as shown. Align the auger sprockets with the idler sprocket and tighten securely the setscrews on the auger flange bearings to stabilize the augers. Tighten the chain and tighten the idler sprocket.
9. Install the new chain guard (item 21) included in the kit using three 1/2"NC x 1" bolts, lockwashers and nuts (items 22-23-26). Reinstall the lower auger chain and the chain guard (item 1).
10. Tighten the chain as per instructions in the ***Chain Idler Adjustment*** section at page 31.

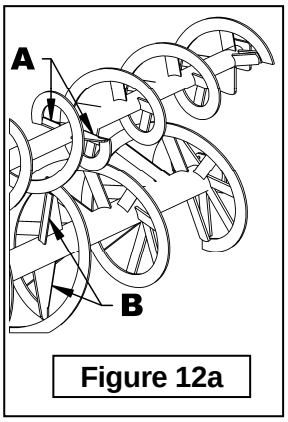

Figure 12a

Figure 12

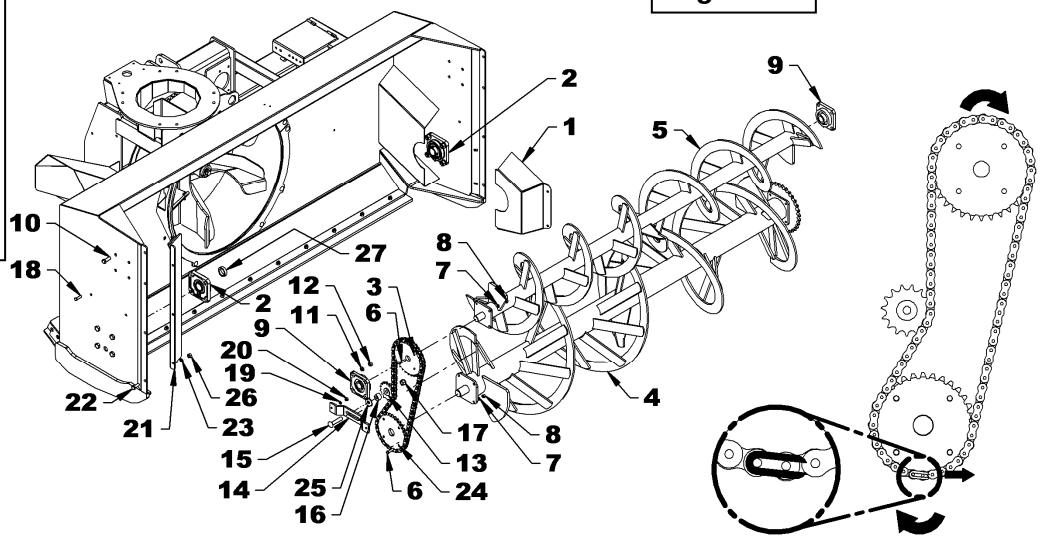

Installation of Serrated Auger - BER0106 OPTION

(Figure 13)

1. Remove the chain guard (item 1) and loosen drive chain as per instructions in the ***Chain Idler Adjustment*** section at page 31, then remove the chain.
2. Remove the 1/2"NC x 1 1/2" bolts (item 6) that secure the flange bearings (items 9) on each lower auger side. Remove the auger, the flange bearings and the spacer (item 10).
3. Remove the auger sprocket (item 11) by removing the 7/16"NC X 1 1/2" bolts , lockwashers and nylon insert lock nuts (items 12-13-14).
4. Install the sprocket (item 11) on the serrrated auger and secure with four 7/16"NC X 1 1/2" bolts, lockwashers and nylon insert lock nuts (items 12-13-14).
5. Slide the spacer (item 10) and the flange bearings (items 9) on the serrated auger. Do not tighten the setscrews on the flange bearings for now.
6. Insert the auger in the frame and secure the flange bearings (items 9) to the frame using 1/2"NC x 1 1/2" bolts, lockwashers and 1/2" nuts (items 6-7-8).
7. Firmly press the auger sprocket (item 11) on the left flange bearing (item 9) and well tight the setscrews of the two flange bearings.
8. Reinstall the chain (item 5) and tighten it as per instructions in the ***Chain Idler Adjustment*** section at page 31.
9. Reinstall the chain guard (item 1) using two 3/8"NC X 1" bolts, lockwashers and 3/8"NC nuts (items 2-3-4).

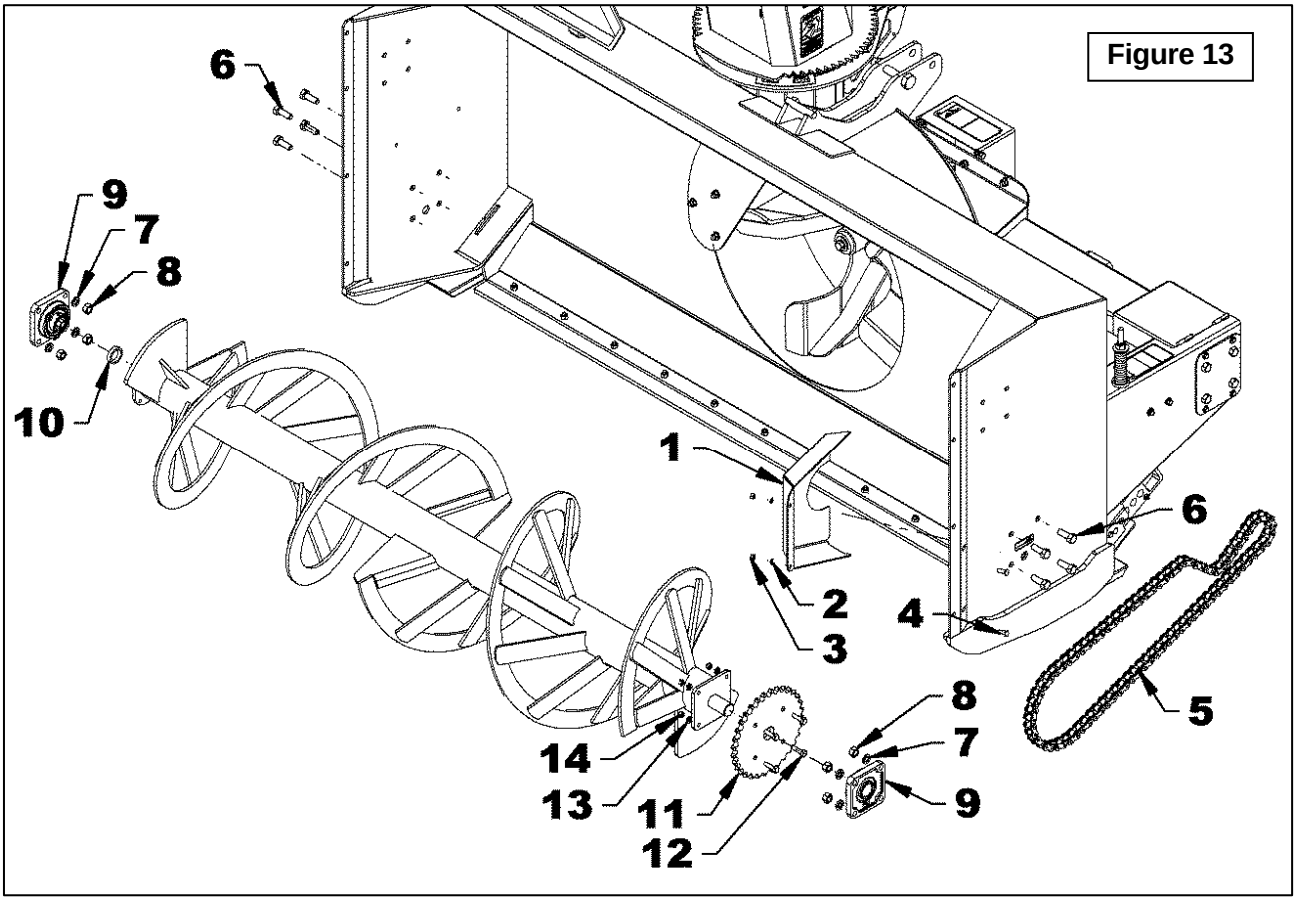

Installation of Drift Cutters - BER0088 OPTION

(Figure 14)

Install the drift cutters (items 1-2) on the exterior of each snowblower side by aligning the top and bottom holes and fasten with eight 1/2"NC x 1 3/4" lg plow bolts, 1/2" lockwashers and 1/2"NC nuts (items 3-4-5).

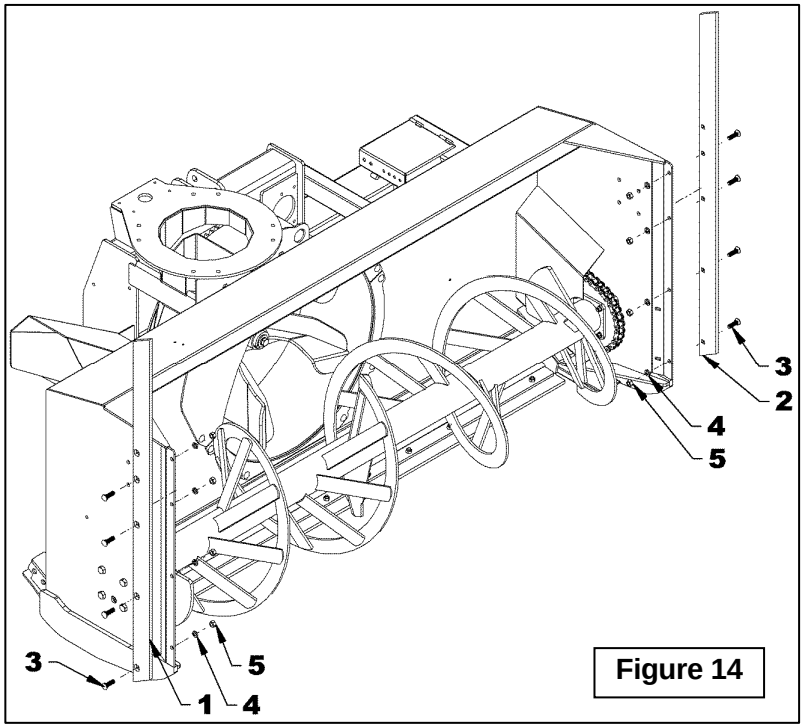

Figure 14

Installation of Stainless Skid Shoes - BER0101 OPTION

(Figure 15-15a)

1. **Figure 15:** Remove the 5/16"NC x 1 1/2" bolt and 5/16"NC nylon insert locknut (items 4-5).
2. **Figure 15:** Remove the round wire lock pin and the "L" pin (items 2-3).
3. Remove the skid shoe assembly by sliding it downward.
4. **Figure 15a:** Remove the steel skid shoe base (item 5) by removing the 3/4"NC x 3" bolt, lockwasher and 3/4" nut (items 6-7-8).
5. Install the new stainless skid shoe base and reinstall by doing the previous steps in reverse.

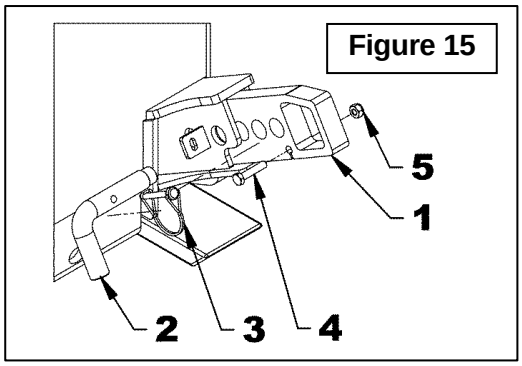

Figure 15

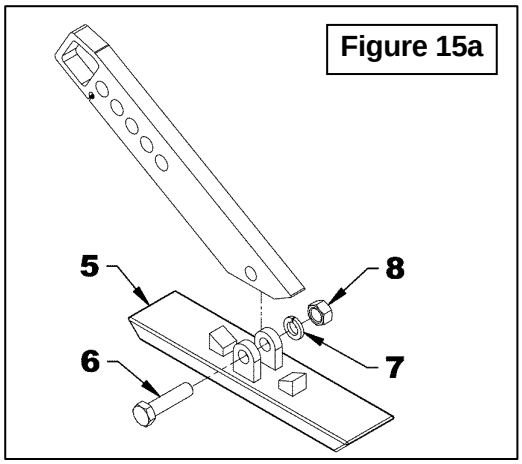

Figure 15a

Installation of the Snowblower with the Three Point Hitch

(Figure 16)

1. Attach the tractor lower hitch arms (item 1) to the snowblower lower hitches (item 7) with the hitch pins and linchpins (items 6-2).
2. Install the tractor adjustable arm (item 3) in the upper hole of the snowblower attaching plates (item 5) with the hitch pin (item 4).
3. To level snowblower front to back, adjust using the tractor adjustable arm (item 3).
4. To level side to side, use leveling crank on right lower lift arm.
5. Set the tractor anti-sway turnbuckles so the snowblower does not sway. Be sure the turnbuckles clear the tractor tires.

CAUTION: Before connecting snowblower driveline to tractor drive shaft, make sure driveline is not too long in raised, lowered and middle position. If the driveline is too long it must be shortened, to avoid damaged to tractor. See pages 23 to 25 for instructions.

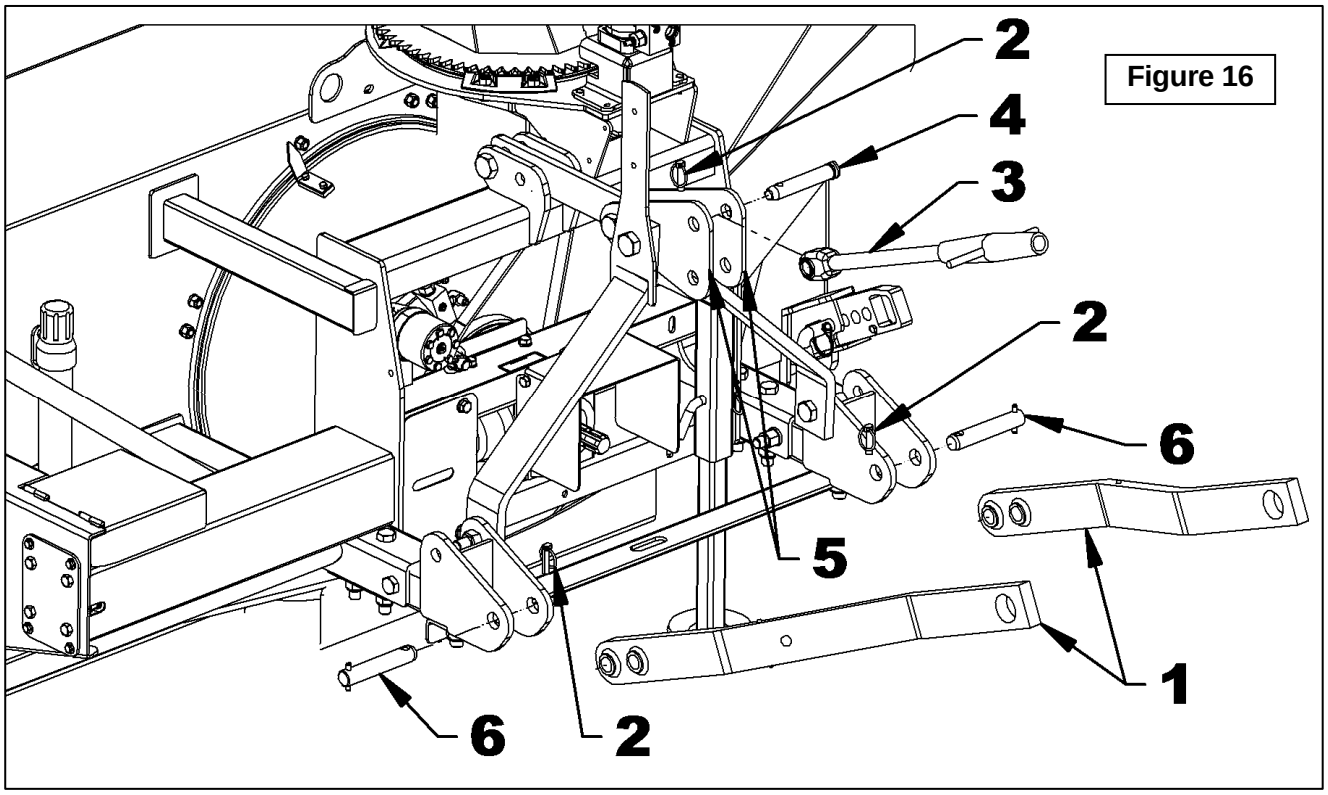

Figure 16

Preparation of the Driveline

RECOMMENDATIONS FOR DRIVELINE ANGLES

IMPORTANT: To obtain the proper universal joint angles, it is recommended to adjust the three point hitch at the furthest point from the tractor recommended by the manufacturer.

The universal joint angle is directly related with the life of driveline. In order to reduce the angle, it is necessary to increase the distance between the snowblower and the tractor.

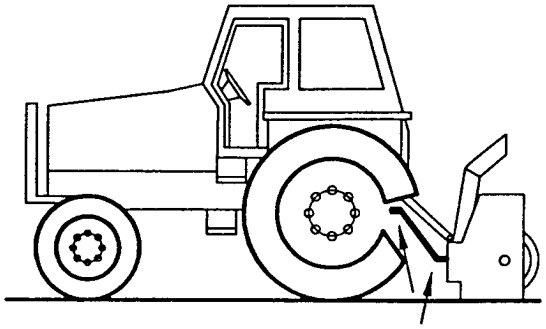

Angles of Driveline Joints Too Large
Avoid

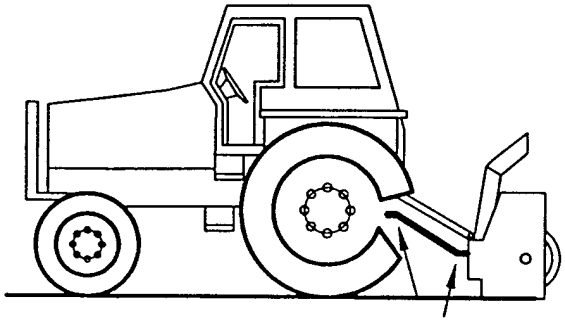

Reasonable Angles of Driveline Joints
Acceptable

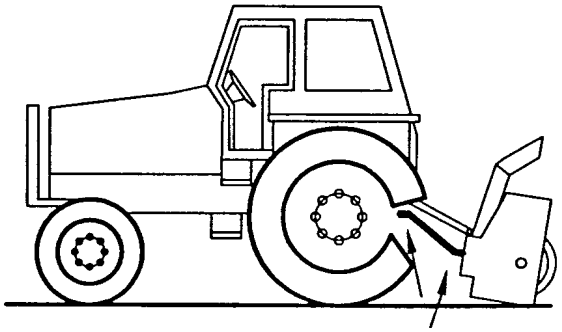

Unequal Angles at Driveline Joints
Avoid

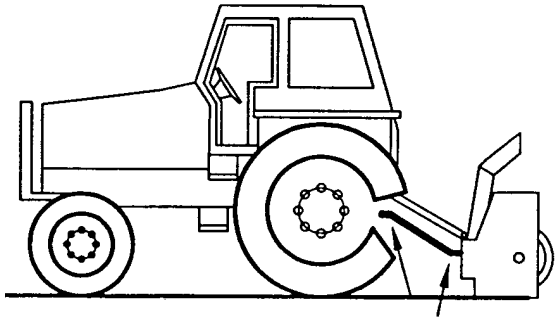

Equal Angles at Driveline Joints
Recommended

ANGLES AT EACH END OF DRIVELINE

A popular habit is to change the snowblower angle in order to obtain a better scraping effect. This practice can become harmful to the driveline since the angle at each end is unequal. This results in a fan speed variation as well as a drastic increase of load on cross and bearings. To be avoided: It is recommended to always keep tractor driveline and snowblower input shaft parallel.

DETERMINING DRIVELINE LENGTH

IMPORTANT: Before using the equipment, make sure the driveline is not too long. At working position, the two half drivelines must intersect each other sufficiently to insure maximum efficiency but there must not be any interference.

1. To determine the **"L"** length for your tractor model first find the **"X"** factor by measuring the horizontal distance between the end of the tractor's drive shaft and the end of the snowblower's driven shaft when the snowblower is in transport position as shown on figure 17.
2. Choose in the table below the **"Y"** factor according to the tractor category and deduct that number from **"X"** to determine **"L"** which is the center-to-center length between the universal joints.

L = X – Y	
3 PTS HITCH CATEGORY	Y
Cat. 2	5 1/2"

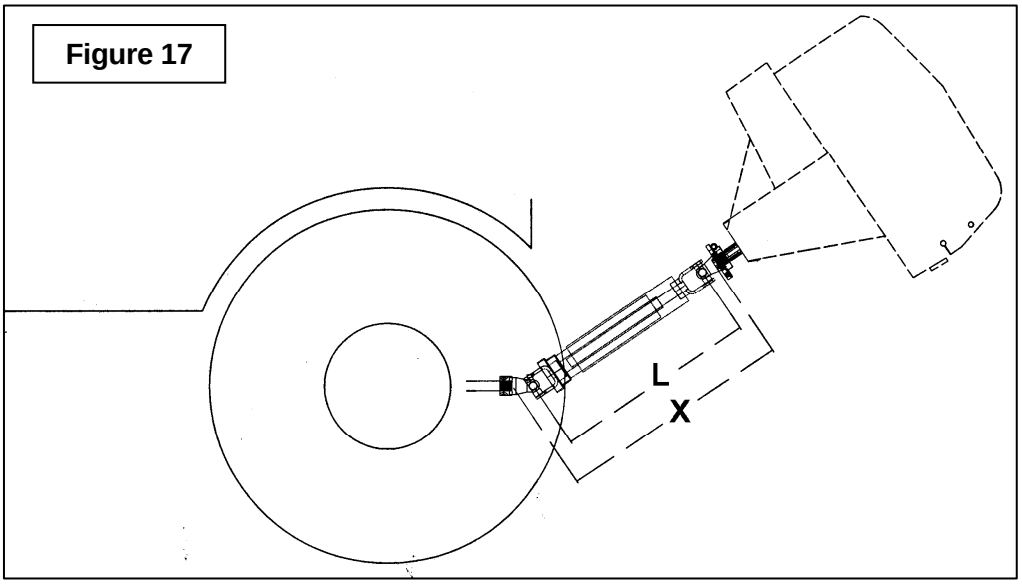

Figure 17

NOTE: Before cutting, make sure the two shafts intersect by at least 5" when in working position that is when the snowblower rests on the ground.

3. Hold the two half-shaft side by side and locate the **"L"** length between the two center-to-center half-shaft universal joints. Mark off the zone to be cut on both halves opposite each half-shaft guard as shown on figure 18
4. Cut off inner and outer guard tubes as well as the inner and outer telescopic sections.
5. Cut the guard a second time leaving the same distance between the end of the guard and the end of the shaft as existed before. To obtain the proper distance "A" shown on figure 19, cut the guard according to the following table:

DISTANCE A	
Male PTO	Female PTO
1 3/4"	1 1/4"

3. File down tubes and remove chips.
4. Apply grease to inside of outer telescopic section.

IMPORTANT: Work with fully guarded shafts only!

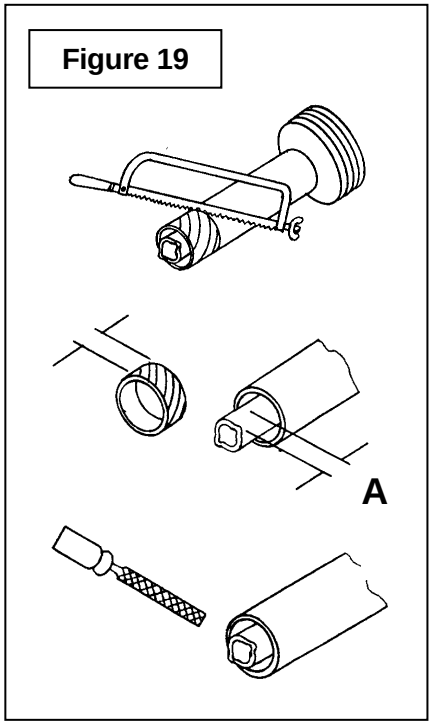

Figure 19

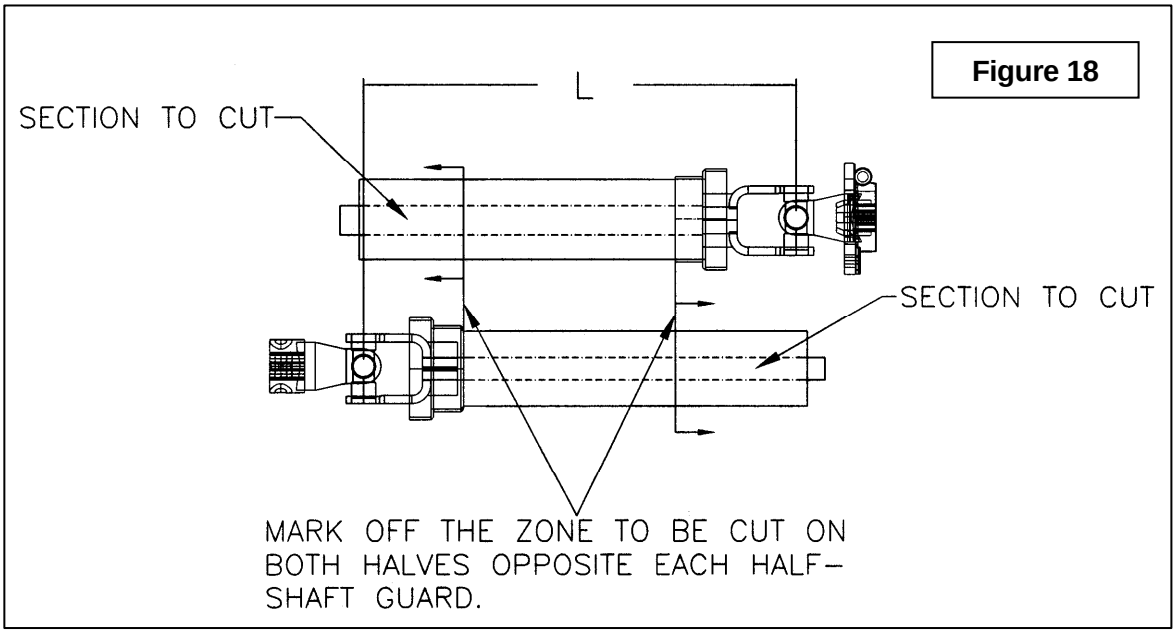

Figure 18

Driveline Installation
(Figure 20)

1. Remove the paint from the gearbox shaft (item 1) and grease the driveline sliding surfaces and yoke.
2. Remove the two bolts (item 2) from the yoke and connect the yoke to the gearbox shaft. Secure the driveline with the two bolts and nuts (item 2) in the way illustrated. Tighten bolts according to the ***Torque Specification Table*** at the end of the manual.
3. Connect the driveline to the tractor PTO; making sure the driveline is well secured to the tractor.
4. Secure a driveline safety chain to the tractor appropriate location and the other to the three point hitch brace (item 3) to prevent the driveline shield from rotating.

NOTE: Depending on tractor used, it may be necessary to install front tractor weights to maintain front-end stability.

Removing Snowblower from Tractor:

Find a level surface. Lower the parking stand. Remove the driveline from the tractor PTO. Remove the hydraulic hoses. Detach the top link. Detach the right lower link then detach the left lower link.

IMPORTANT: To avoid damage to the snowblower, retorque all bolts after the first 10 hours of operation.

NOTE: We recommend installing the chain of the Driveline shaft to support it when you store your snow blower.

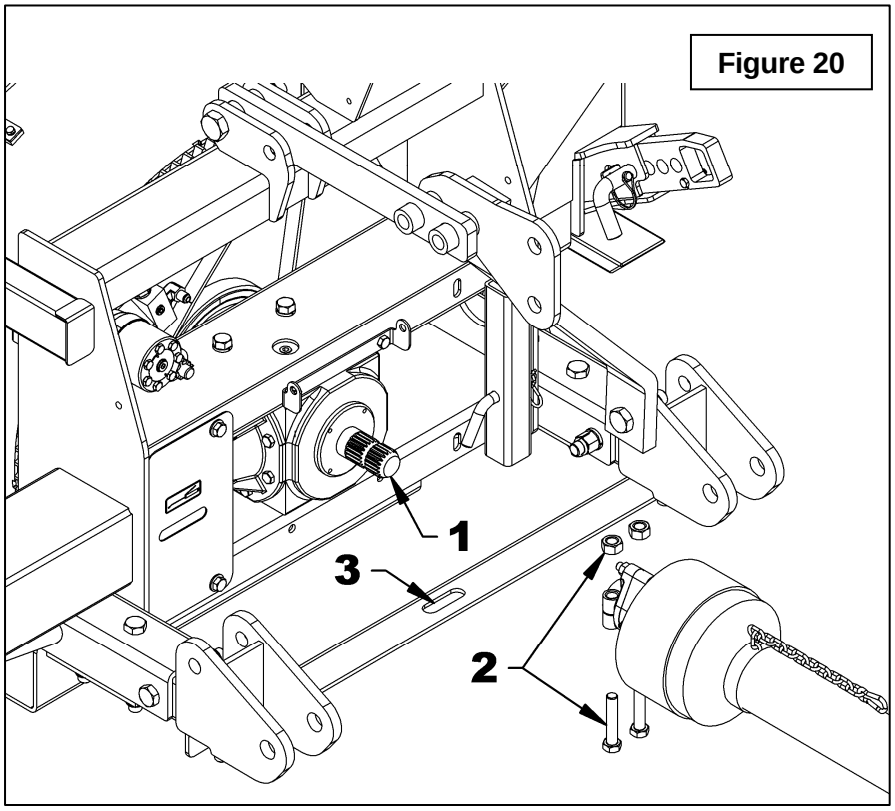

Figure 20

OPERATION

GENERAL PREPARATION

1. Read the operator's manual carefully before using the tractor and snowblower. Be thoroughly familiar with the controls and proper use of the equipment. Know how to stop the unit and disengage the controls quickly.
2. Wear adequate winter outer garments while operating equipment.
3. Make sure the snowblower is clear of snow before engaging the driveline.
4. Make sure the auger and fan operate freely.
5. Check the oil level in the worm gear box and if necessary, add SAE 80W90 gear oil, AGMA 5EP oil or equivalent.
6. Check the two shear bolts, one on the drive shaft and one on the PTO shaft for proper tightness.
7. Adjust so that the snowblower skid shoes run level.
8. Make sure the parking stand is in raised position.

OPERATING CONTROLS

Raising and Lowering Snowblower

Move the three point lever down or forward to lower, and up or rearward to raise.

Work and Travel Speed

Working ground speed will depend on the depth and density of the snow to be cleared. Normally, ground speed will range from 4 to 7 MPH for light, dry snowfalls 3 to 6 inches, and 1 to 3 MPH for heavy, wet or drifted snow. To transport, disengage the drive shaft and raise the snowblower to full transport height.

PTO Operation

Refer to tractor manual to learn the operation of the activation of the PTO.

Chute Rotation Orientation

This blower is equipped with a hydraulic motor rotation. The motor is provided with flow restrictors which limit the chute rotation speed. Make sure hoses are properly connected to the tractor hydraulic outputs. Activate the appropriate tractor commands to activate the appropriate outputs and thus activate the chute rotation. Reverse the hoses if the movement of the chute is not in the desired direction.

Hydraulic Chute Deflector Orientation

This blower is equipped (if equipped) with a hydraulic deflector. The cylinder is provided with flow restrictors which limit the displacement speed of the output of the chute. Make sure hoses are properly connected to the tractor hydraulic outputs. Activate the appropriate commands to activate the tractor appropriate outputs and thus activate the deflector. Reverse the hoses if the movement of the output chute is not in the desired direction.

ADJUSTMENTS

CAUTION: To avoid personal injury, be sure the tractor engine is off, the drive shaft disengaged, and all movement has stopped BEFORE making any adjustments.

Manual Deflector Adjustment

Set the angle of deflection according to the distance the snow must be thrown. To set the deflector angle, remove the pin from the adjustment tube, adjust the deflector to the appropriate angle and replace the pin.

Skid Shoe Adjustment

Figure A: Adjust the snowblower so that the skid shoes run level. Adjust the skid shoes according to the surface conditions so that stones are not thrown with the snow. Make sure they are at the same height so that the cutting edge is level.

To adjust skid shoes, remove the round wire lockpins (item 1) and the "L" pin (item 2) and do the following settings:

Clearance between cutting edge and surface:

***Level paved surface*:** Adjust to 1/16" to 1/8"

***Uneven or gravel surface*:** Adjust to 1/2" and more according to size of gravel.

Chute Door Adjustment

Figure B:

The 3-part chute has a removable access door at the front. The use of this door increases visibility when a curtain of snow comes out of the front of the chute, which is often the case when blowing powdery snow.

For best results, place the door in the up position. However, having the door at this position can cause a problem of clogging the chute if the snow is denser.

The door can also be placed in the low position. This position gives a lower quality of visibility but can greatly reduce the risk of clogging. The lower position can also be used as a position for storage.

In the event that the door is not used, it can be simply removed.

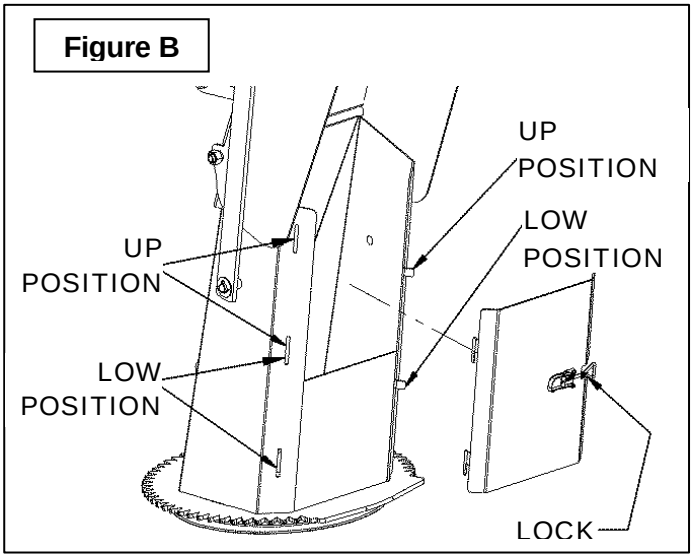

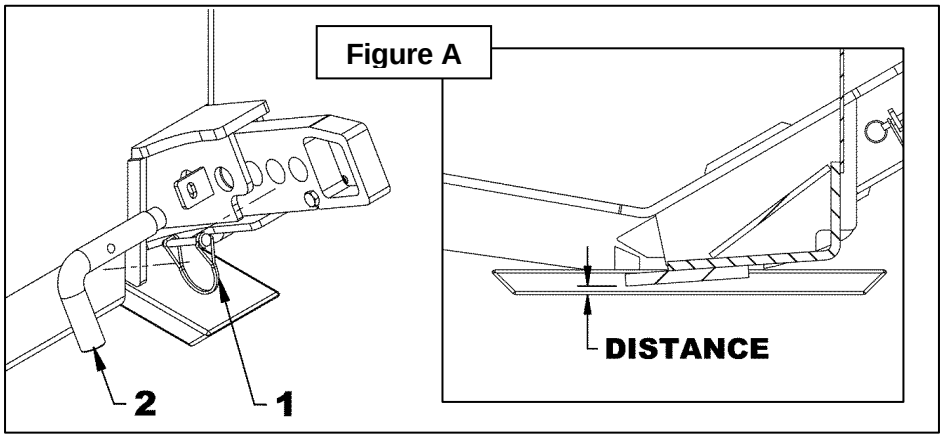

SNOW REMOVAL METHODS

When removing snow, do not use the snowblower as a dozer blade to push snow. Let the snowblower work its way through deep drifts. If the speed of your tractor is too fast, the snowblower may become overloaded and clog. For best results, raise the snowblower and remove a top layer of snow. A second pass with the snowblower will remove the remaining snow.

IMPORTANT: Use full RPM power when removing wet, sticky snow. Low RPM power will tend to clog the chute.

⚠ WARNING

Do not use hands or feet to unclog chute. Do not attempt to clear clogged chute of snow while tractor engine is running. If the chute clogs, disengage the drive shaft, shut off the tractor engine, remove the ignition key, wait for all movement to stop, and then clear the snow from the chute.

A definite pattern of operation is required to thoroughly clean the snow area. These patterns will avoid throwing snow in unwanted places as well as eliminating a second removal of snow

PATTERN 1

DISCHARGE SNOW BOTH SIDES

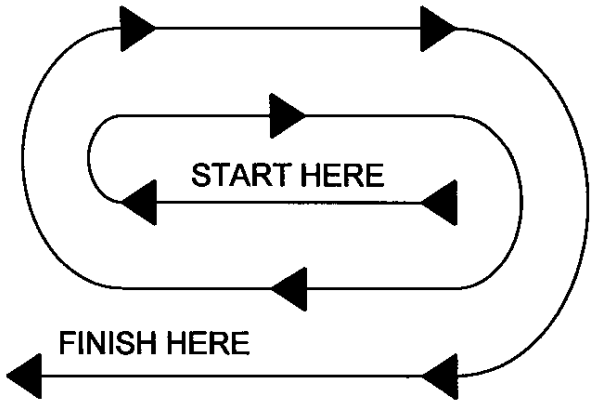

DISCHARGE SNOW BOTH SIDES

PATTERN 2

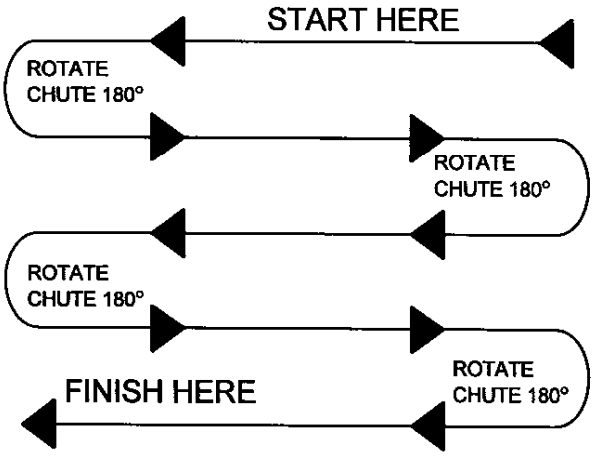

DISCHARGE SNOW THIS SIDE ONLY

Where it is possible to throw the snow to the left and right (above), as on a long driveway, it is advantageous to start in the middle. Plow from one end to the other, throwing snow to both sides without changing the direction of the discharge guide

If the snow can only be thrown to one side of the driveway or sidewalk (above), start on the opposite side. At the end of the first pass, rotate the discharge guide 180 degrees for the return pass. At the end of each succeeding pass, rotate the discharge guide 180 degrees to maintain direction of throw in the same **area.**

MAINTENANCE

WARNING: Provide adequate blocking before working under the snowblower when in the raised position.

Shearbolts

Check the shearbolts indicated on the figure below at frequent intervals for proper tightness to be sure the blower is in safe working condition. The spare bolts are located on the chain cover of the snowblower. If the bolts have to be replaced, use these parts only:

Driveshaft:

Shearbolt hex. 3/8"NC x 1 1/4" lg, 3/8"NC nut and 3/8" lockwasher, Part# 668029.

Driveline:

Bolt M10 x 55mm lg, gr.8.8 including nut. Part# 657199.

Driveline

IMPORTANT: When the snowblower is not used for more than two weeks, perform driveline maintenance and always store it in a dry place, away from bad weather conditions.

SHEARBOLTS

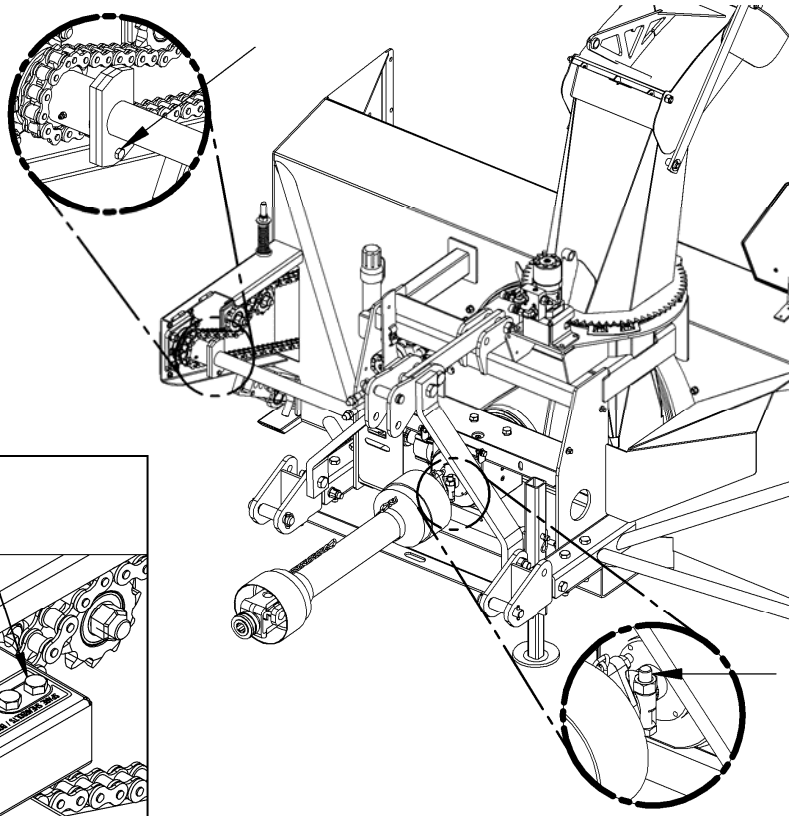

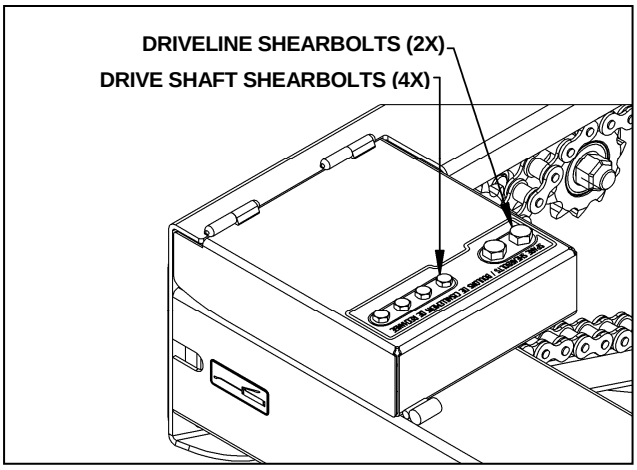

Chain Idler Adjustment ***(Figures A-B)***

A - COMPRESSION SPRING ***(Fig. A)***:

1. Every ten operating hours check the height of the compression spring (item 1), to have chain idler maximal efficiency.

2. Adjust the distance from the top of the welded bushing (item 2) to the bottom of the flat washer (item 3) by tightening the nut (item 4), to obtain **A:**

3 1/2" to 4 1/4"

B - DRIVING CHAIN ***(Fig. A)***:

1. At the end of the operating season, check the chain elongation by measuring the distance **B** from top of the sprocket to underneath the side plate.

2. That distance must be of 2 1/8" minimum, if less than 2 1/8", the chain is too much stretched and may cause premature wear of the sprockets. It needs to be changed.

C - SECOND AUGER CHAIN TENSION ***(Fig. B)***:

1. At the end of the operating season, check the chain elongation by measuring the side deflection distance C.

2. The side to side deflection distance must be of 1/4” to 3/8”. If the deflection is higher, the chain is too much stretched and may cause premature wear of the sprockets. Adjust the mobile idler to respect the measure. If you can’t adjust the Idler because you are at the end of the slot, the chain needs to be changed.

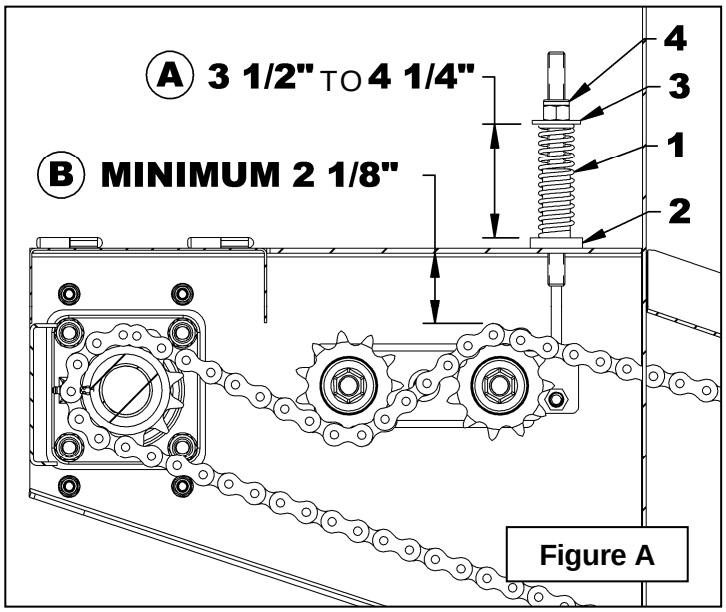

Figure A

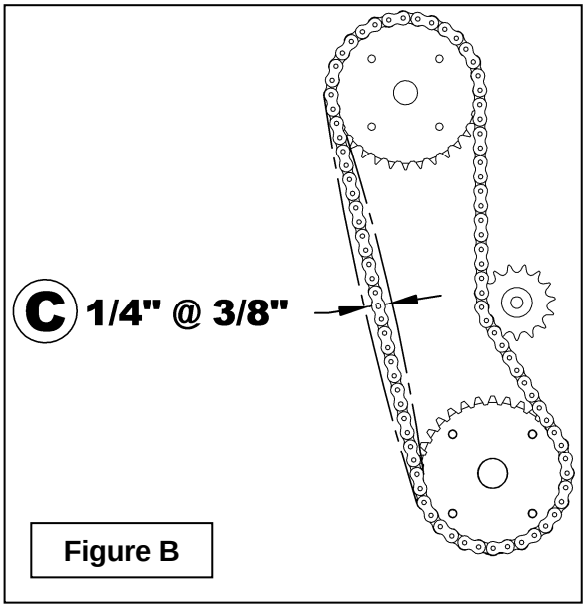

Figure B

LUBRICATION Use oil or a grease gun and lubricate as follows:

DESCRIPTION	INTERVAL	LUBRICATION REQUIRED
Driveline	8 hours	Grease each universal joint. Separate the sliding parts and cover each one of them with grease.
	16 hours	Oil the sliding sleeve collar
Chain	4 hours and after each operation	Lubricate with chain lube
Drive Shaft	24 hours	Grease fitting on shear plate and the gearbox coupler
Gearbox	Every month	Check oil level. If needed, add AGMA 5EP extreme pressure oil, SAE 80W90 gear oil or equivalent; 1.1 L or to cap oil level
	Once a year	Replace oil; 1.1 L or to cap oil level
Cover hinge	Every month	Oil the hinge
Chute hinge	24 hours	Grease the grease fittings on the hinges
Bearings	24 hours	Grease each bearing

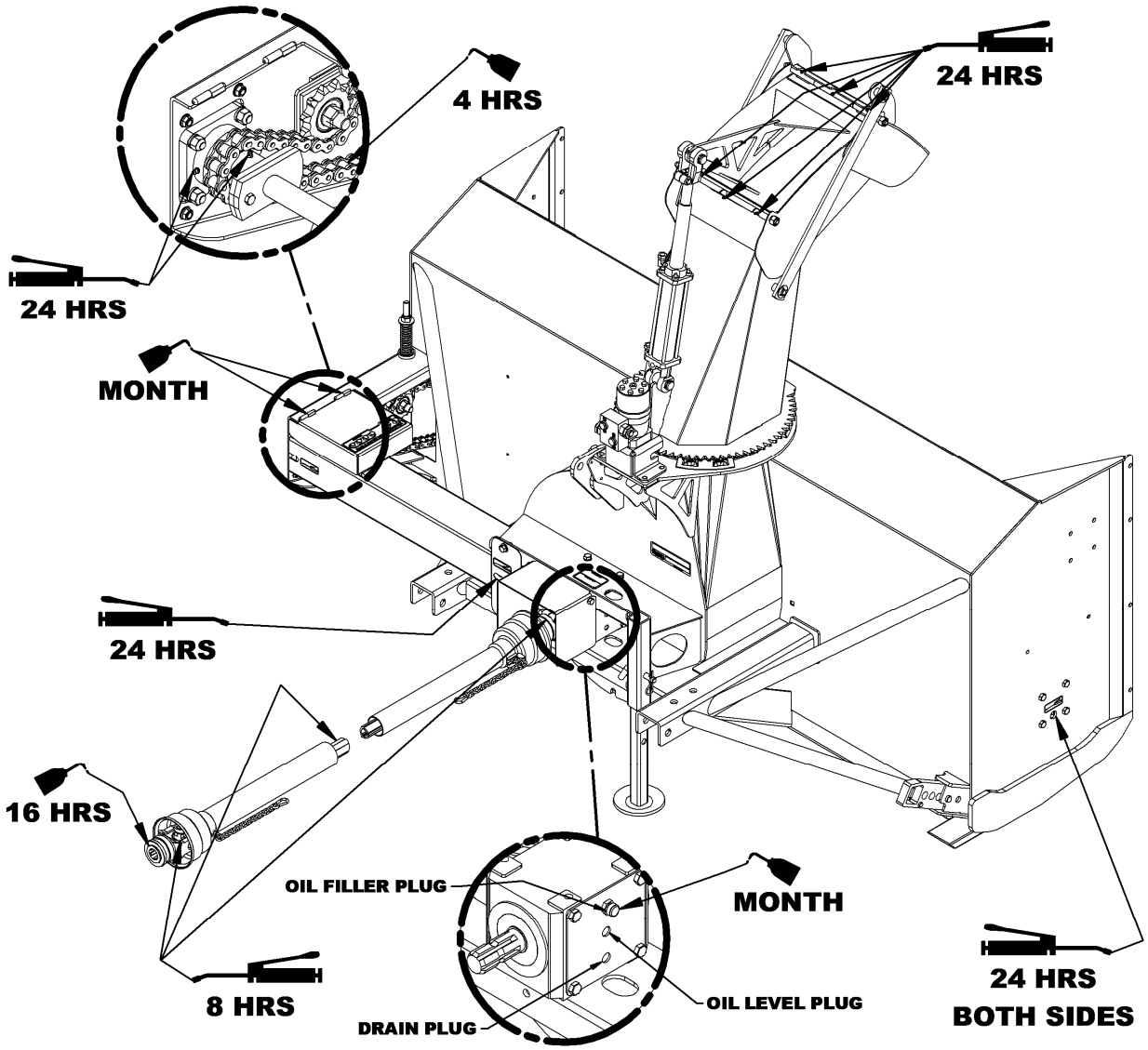

DRIVELINE TROUBLESHOOTING

	AVOIDABLE DAMAGES	POSSIBLE CAUSES	CORRECTIVE ACTIONS
QUICK-DISCONNECT YOKE 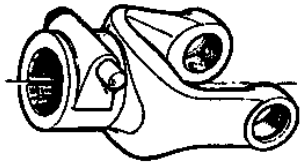	◆ Quick-disconnect pin tight or completely seized. ◆ Quick-disconnect pin damaged (broken or bent) ◆ Quick-disconnect pin damaged in the locking portion. 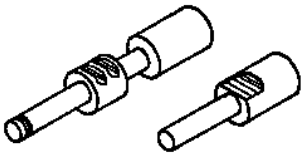	◆ Quick-disconnect pin dirty (insufficient maintenance). ◆ Quick-disconnect pin defective (forced engagement, incorrect handling) ◆ Excessive shaft length. ◆ Axial loads too high.	◆ Clean, oil and follow service instructions. ◆ Replace quick-disconnect pin. ◆ Shorten shaft length (cut both telescopic tubes as well as shield and remove burrs). ◆ Replace quick-disconnect pin. ◆ Clean and grease telescopic tubes, and replace both tubes, if necessary. ◆ Replace quick-disconnect pin.

Note: Quick-disconnect pins must be cleaned and greased every 16 hours.

	AVOIDABLE DAMAGES	POSSIBLE CAUSES	CORRECTIVE ACTIONS
YOKE 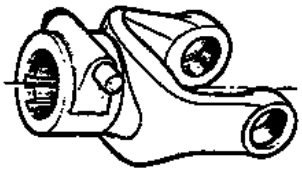	◆ Yoke ears deformation 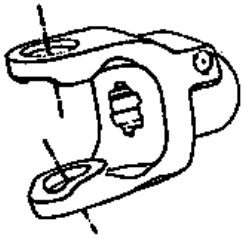 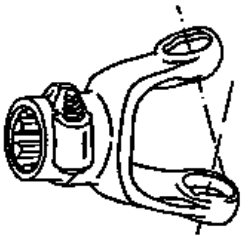	◆ Excessive shaft length. ◆ Axial loads too high. ◆ Excessive working angle and torque.	◆ Shorten shaft length (cut both telescopic tubes as well as shields and remove burrs). ◆ Replace defective yokes. ◆ Clean and grease telescopic tubes, and replace both tubes, if necessary. ◆ Replace defective yokes. ◆ Verify compatibility between shaft and working conditions (torque vs. angle). ◆ Disengage tractor driveline during cornering or when lifting or lowering the implement. ◆ Change to a larger driveline size. ◆ Replace defective yokes.
	◆ Yoke ears distorted. 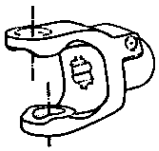	◆ Overload caused by high starting and peak torques.	◆ Engage driveline more carefully. ◆ Use appropriate safety devices. ◆ Replace defective yokes.
	Yoke ears worn or pounded. 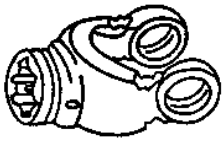	◆ Excessive working angle.	◆ Avoid excessive working angle. ◆ Disengage tractor driveline during cornering. ◆ Replace defective yokes.

	AVOIDABLE DAMAGES	POSSIBLE CAUSES	CORRECTIVE ACTIONS
CROSS KIT 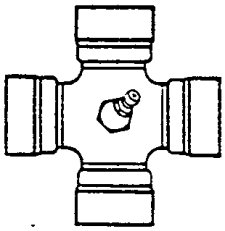	◆ Cross arms broken. 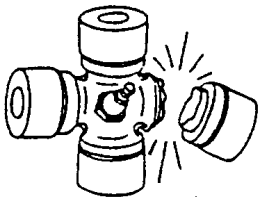	◆ Extreme torque peak or shock load. ◆ Axial loads too high.	◆ Use appropriate safety device. ◆ Change to a larger driveline size. ◆ Shorten driveline shaft. ◆ Replace defective cross bearings.
	◆ Bearing caps turning in their cross journal. ◆ Overheated bearing caps.	◆ Excessive continuous torque and/or excessive working angle. ◆ Inadequate greasing.	◆ Verify compatibility between shaft and working conditions. ◆ Carefully follow greasing instructions. ◆ Replace defective cross bearings.
	◆ Accelerated wear of cross kit. 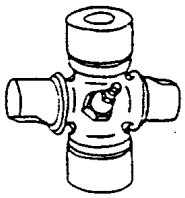	◆ Excessive continuous torque and/or excessive working angle. ◆ Inadequate greasing.	◆ Verify compatibility between shaft and working conditions. ◆ Carefully follow greasing instructions. ◆ Replace defective cross bearings.

Note: Cross bearings must be greased every 8 working hours.

	AVOIDABLE DAMAGES	POSSIBLE CAUSES	CORRECTIVE ACTIONS
TELESCOPIC TUBES 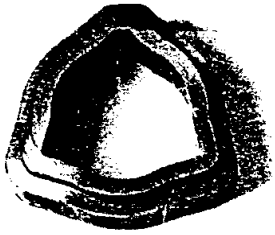	◆ Telescopic tubes failure or twisting. 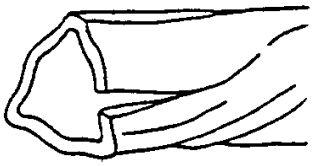	◆ Extreme torque peak or shock load. ◆ Short tube engagement.	◆ Use appropriate safety device. ◆ Change to a larger driveline size. ◆ Replace the driveline drive shaft with one having adequate length. ◆ Replace defective tubes.
	◆ Accelerated wear of telescopic tubes.	◆ Extreme load when sliding. ◆ Short tube engagement. ◆ Inadequate greasing. ◆ Dirt	◆ Change to a driveline with rilsan coated inner tube. ◆ Replace the driveline with one having adequate length. ◆ Carefully follow greasing instructions. ◆ Replace defective tubes.

Note: Telescopic tubes must be cleaned and greased every 8 working hours.

	AVOIDABLE DAMAGES	POSSIBLE CAUSES	CORRECTIVE ACTIONS
SHIELD 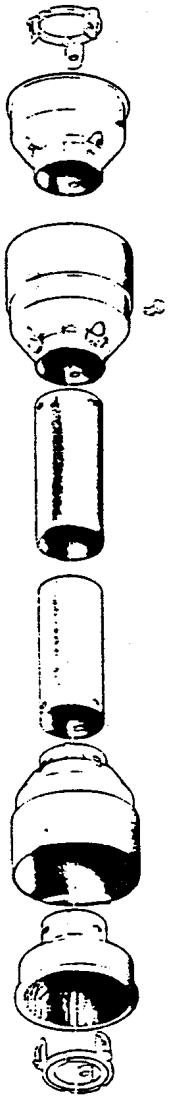	◆ Excessive wear of shield bearings. 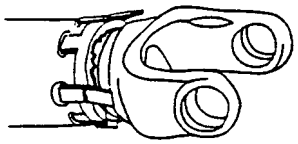	◆ Insufficient lubrication. ◆ Incorrect chain mounting. ◆ Shield interfering with implement.	◆ Follow lubrication instructions. ◆ Mount chain to allow maximum angularity. ◆ Avoid contact of the shields with fixed parts of the machine or tractor. ◆ Replace shield bearings.
	◆ Chain moving or failure. 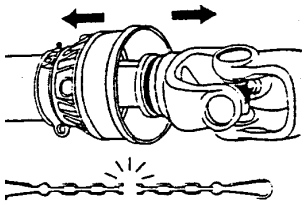	◆ Shield interfering with implement. ◆ Incorrect chain mounting.	◆ Avoid contact of the shields with fixed parts of the machine or tractor. ◆ Mount chain to allow maximum angularity. ◆ Replace defective parts.
	◆ Shield cone damaged. 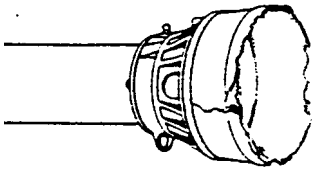	◆ Shield cone in contact with components on the tractor and/or implement. ◆ Excessive angularity.	◆ Eliminate interference between Shield cones and any part on the tractor and/or implement. ◆ Avoid excessive angle during cornering or when lifting or lowering the implement. ◆ Replace damaged Shield cones.
	◆ Shield tubes damaged (deformed and split at one side). 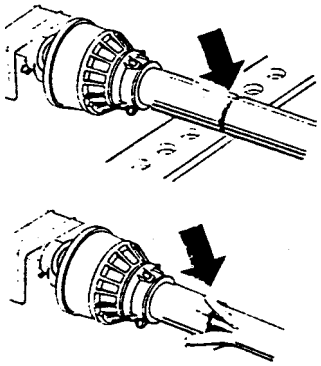	◆ Shields in contact with components on the tractor and/or implement. ◆ Shield tubes overlap too short or no overlap at all with extended driveline.	◆ Eliminate interference between Shield cones and any part on the tractor and/or implement. ◆ Replace damaged tubes. ◆ Adjust Shield tubes length with longer tubes.

Note: Shield bearings must be greased every 8 working hours.

INTRODUCTION

All parts are illustrated in "exploded views" which show the individual parts in their normal relationship to each other. Reference numbers are used in the illustrations. These numbers correspond to those in the "Reference Number" (REF) column, and are followed by the description and quantity required.

O/L - "Obtain Locally" in the part number column indicates common hardware that is available at your local hardware supply.

Right Hand and Left Hand are determined by those seen by the conductor standing behind the equipment.

The manufacturer reserves the rights to change, modify, or eliminate from time to time, for technical or other reasons, certain or all data, specifications, or the product or products themselves, without any liability or obligation.

The parts listed here are available through your local dealer.

MANUAL HOLDER – ALL MODELS

REF.	DESCRIPTION	QTY	PART #
1	Manual holder	1	4200030
2	Bolt hex. 5/16" NC x 3/4" lg gr. 5, PTD	2	O/L
3	Nut nylon insert 5/16" NC, PTD	2	O/L

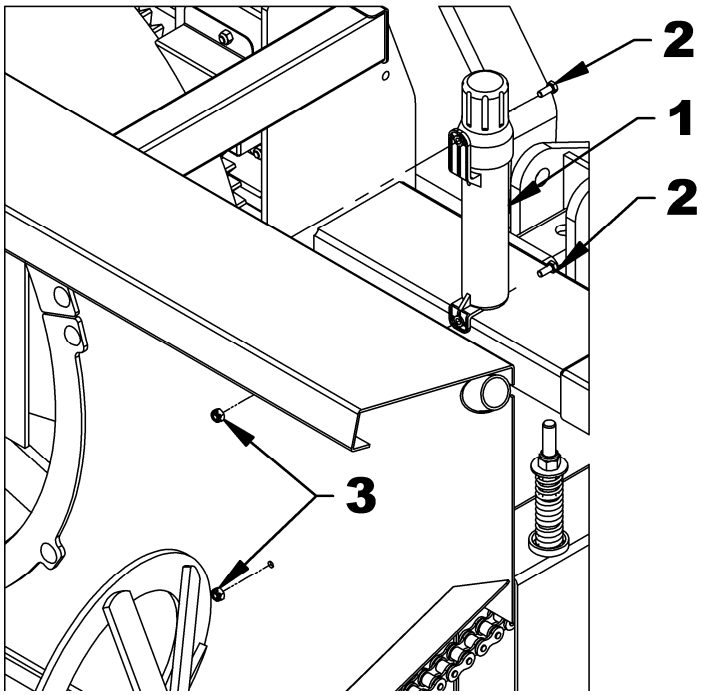

CHAIN IDLER

REF.	DESCRIPTION	QTY	PART #
1	Chain Idler	1	670405
2	Spacer ring	2	670974
3	Idler sprocket 3/4" hole 80A11	2	654756
4	Idler Lever	1	670865
5	Spring guide	1	670866
6	Compression spring	1	664876
7	Plastic bushing	1	4300124
8	Bolt hex 3/8"NC x 1" Gr. 5 PTD	2	O/L
9	Shoulder screw 5/8"NC x 1/2"	1	3200023
10	Bolt hex 3/4"NC x 2 3/4" Gr. 5 PTD	2	O/L
11	Lockwasher 3/8" PTD	2	O/L
12	Flat washer 5/16" (3/8" hole) PTD	2	O/L
13	Flat washer 5/8" (11/16" hole) PTD	1	O/L
14	Serrated flange nut 1/2"NC PTD	1	O/L
15	Nylon insert lock nut 5/8"NC PTD	1	O/L
16	Stover lock nut 3/4"NC PTD	2	O/L

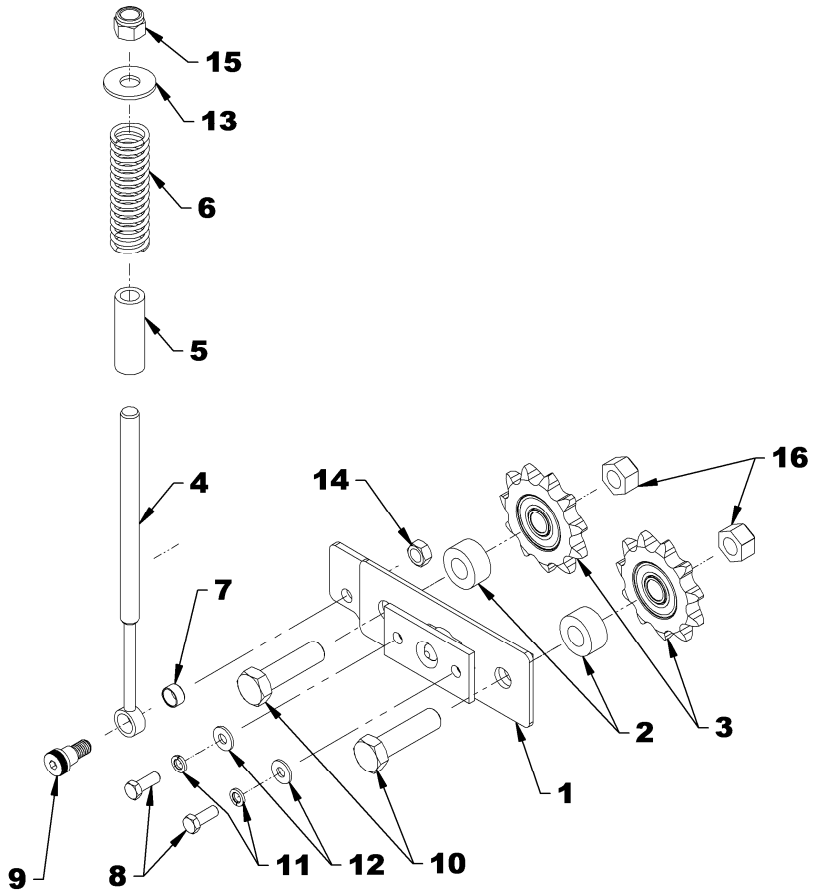

SNOWBLOWER ASSEMBLY – FRONT PART

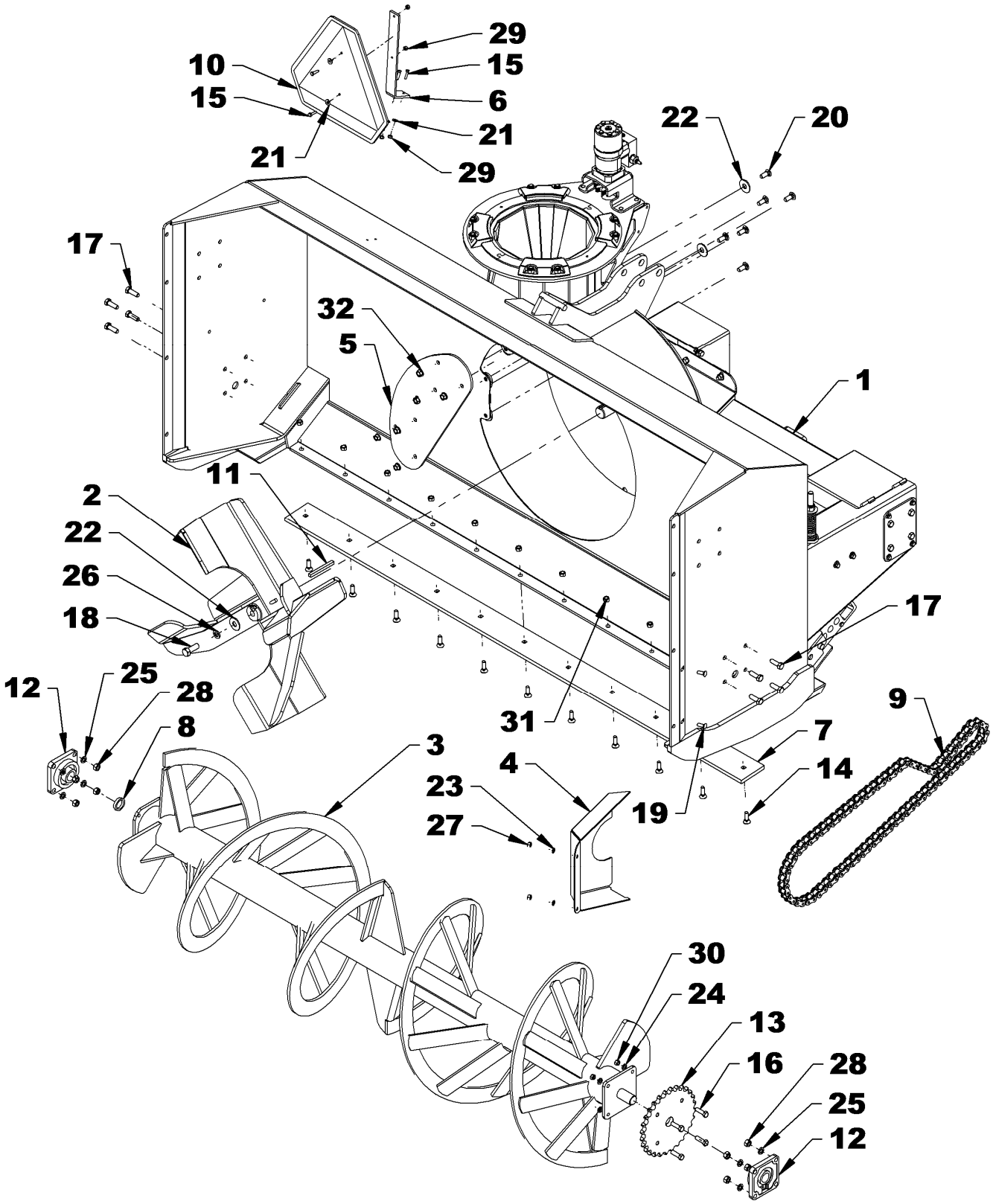

SNOWBLOWER ASSEMBLY – FRONT PART

REF.	DESCRIPTION	QTY	PART #
1	Frame	1	---
2	Fan	1	670878
3	Auger	1	670973
4	Chain guard	1	670935
5	Restriction plate	1	670996
6	S.M.V. sign support	1	668090
7	Cutting edge	1	670966
8	Spacer	1	671137
9	Chain #80 X 79 links inc. connecting link & offset link	1	3300061
	- Offset link #80	1	655550
	- Connecting link	1	655549
10	S.M.V. reflective sign	1	4200029
11	Key 3/8" X 3/8" X 4" lg.	1	4500075
12	Flange bearing Ø1 1/4", 4 holes	2	4300001
13	Sprocket 80A28	1	3300054
14	Plow bolt 7/16"NC x 1 1/2", Gr.5 PTD	11	0400011
15	Bolt hex 1/4" NC x 1", Gr.5 PTD	4	O/L
16	Bolt hex 7/16"NC x 1 1/2", Gr.5 PTD	4	O/L
17	Bolt hex 1/2"NC x 1 1/2", Gr.5 PTD	8	O/L
18	Bolt hex 5/8"NC x 1 3/4", Gr.5 PTD	1	O/L
19	Carriage bolt 3/8"NC x 1" PTD	2	O/L
21	Carriage bolt 1/2"NC x 1 1/4" PTD	6	O/L
22	Flat washer 1/4” (5/16" hole) PTD	4	O/L
23	Flat washer 5/8” (11/16" hole) PTD	3	O/L
24	Lockwasher 3/8” PTD	2	O/L
25	Lockwasher 7/16” PTD	4	O/L
26	Lockwasher 1/2” PTD	8	O/L
27	Lockwasher 5/8” PTD	1	O/L
28	Nut hex 3/8”NC PTD	2	O/L
29	Nut hex 1/2”NC PTD	8	O/L
31	Nylon insert lock nut 1/4”NC PTD	4	O/L
32	Nylon insert lock nut 7/16”NC PTD	4	O/L

SNOWBLOWER ASSEMBLY – REAR PART

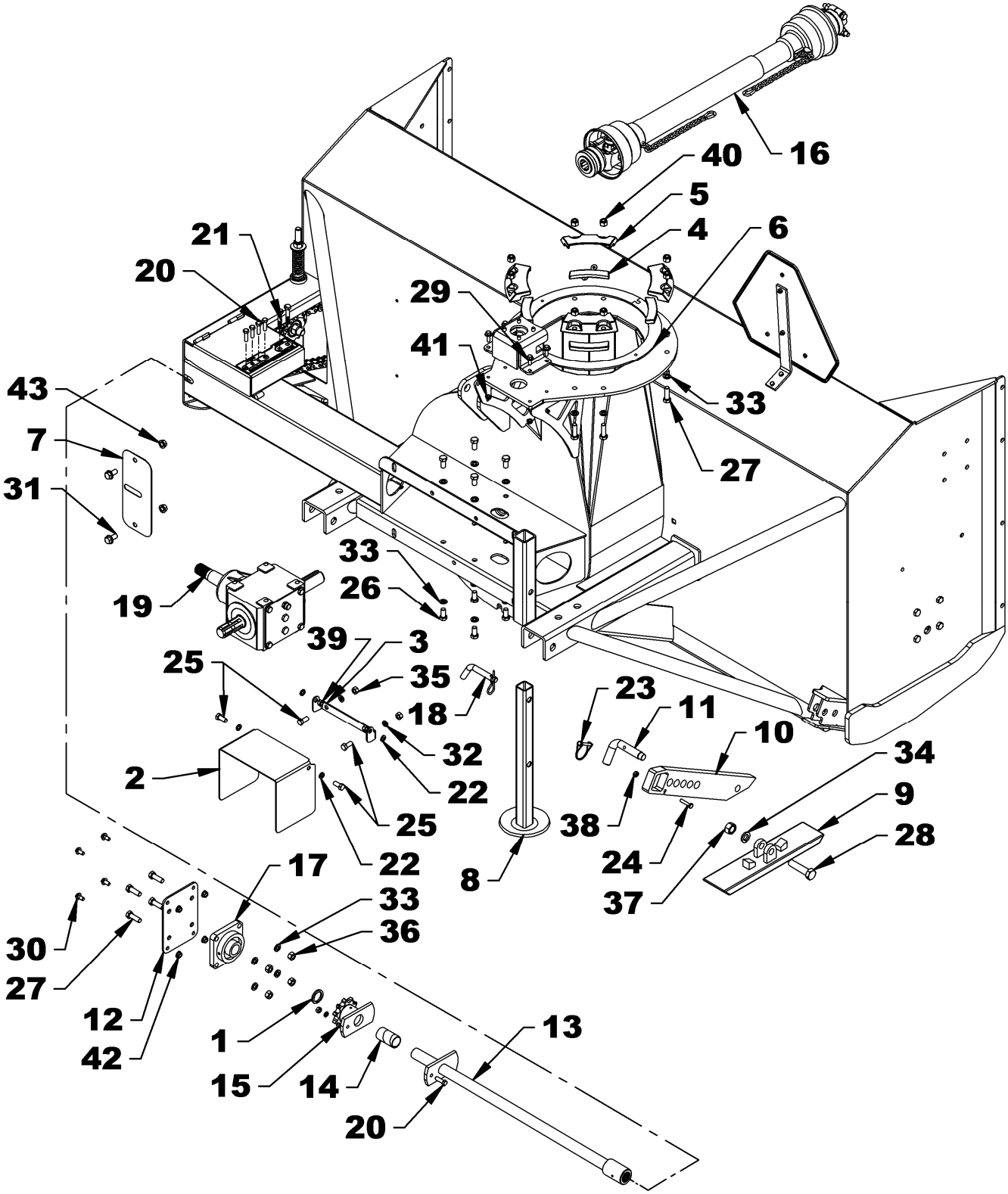

SNOWBLOWER ASSEMBLY – REAR PART

REF.	DESCRIPTION	QTY	PART #
1	Spacer	1	670975
2	Driveline shield	1	670937
3	Driveline shield support	1	670936
4	Chute guide	4	670944
5	Retaining plate	4	670933
6	Anti friction plate	2	670945
7	Protection plate	1	670977
8	Parking stand	1	662252
9	Skid shoe – swivel base	2	670885
10	Slide bar of the swivel skid shoe	2	670899
11	Pin "L" 7/8" x 5" lg - skid shoe	2	670900
12	Drive support	1	670967
13	Drive shaft	1	671218
14	Bushing	1	4300129
15	Shear plate	1	671219
16	Driveline	1	662538
17	Flange bearing ø1 1/4" 4 holes	1	4300001
18	Pin 5/8" x 3" incl. hairpin PTD	1	4600044
19	Gearbox	1	662195
20	Shearbolt incl. Lock & nut	5	668029
21	Shearbolt incl. Nut	2	657199
22	Flat washer nylon 7/16"	4	658468
23	Round wire lockpin 1/4" x 2"	2	1900006
24	Bolt hex 5/16"NC x 1 1/2", Gr.5 PTD	2	O/L
25	Bolt hex 7/16"NC x 1", Gr.5 PTD	4	O/L
26	Bolt hex 1/2"NC x 1", Gr.5 PTD	8	O/L
27	Bolt hex 1/2"NC x 1 1/2", Gr.5 PTD	12	O/L
28	Bolt hex 3/4"NC x 3", Gr.5 PTD	2	O/L
29	Serrated flange bolt 5/16"NC x 1", Gr.5 PTD	4	O/L
30	Serrated flange bolt 3/8"NC x 3/4", Gr.5 PTD	4	O/L
31	Serrated flange bolt 1/2"NC x 1", Gr.5 PTD	2	O/L
32	Lockwasher 7/16" PTD	2	O/L
33	Lockwasher 1/2" PTD	20	O/L
34	Lockwasher 3/4" PTD	2	O/L
35	Nut hex 7/16"NC PTD	2	O/L
36	Nut hex 1/2"NC PTD	4	O/L
37	Nut hex 3/4"NC PTD	2	O/L
38	Nylon insert lock nut 5/16"NC PTD	2	O/L
39	Nylon insert lock nut 7/16"NC PTD	2	O/L
40	Nylon insert lock nut 1/2"NC PTD	8	O/L
41	Serrated flange nut 5/16"NC PTD	4	O/L
42	Serrated flange nut 3/8"NC PTD	4	O/L
43	Serrated flange nut 1/2"NC PTD	2	O/L

THREE POINT HITCH

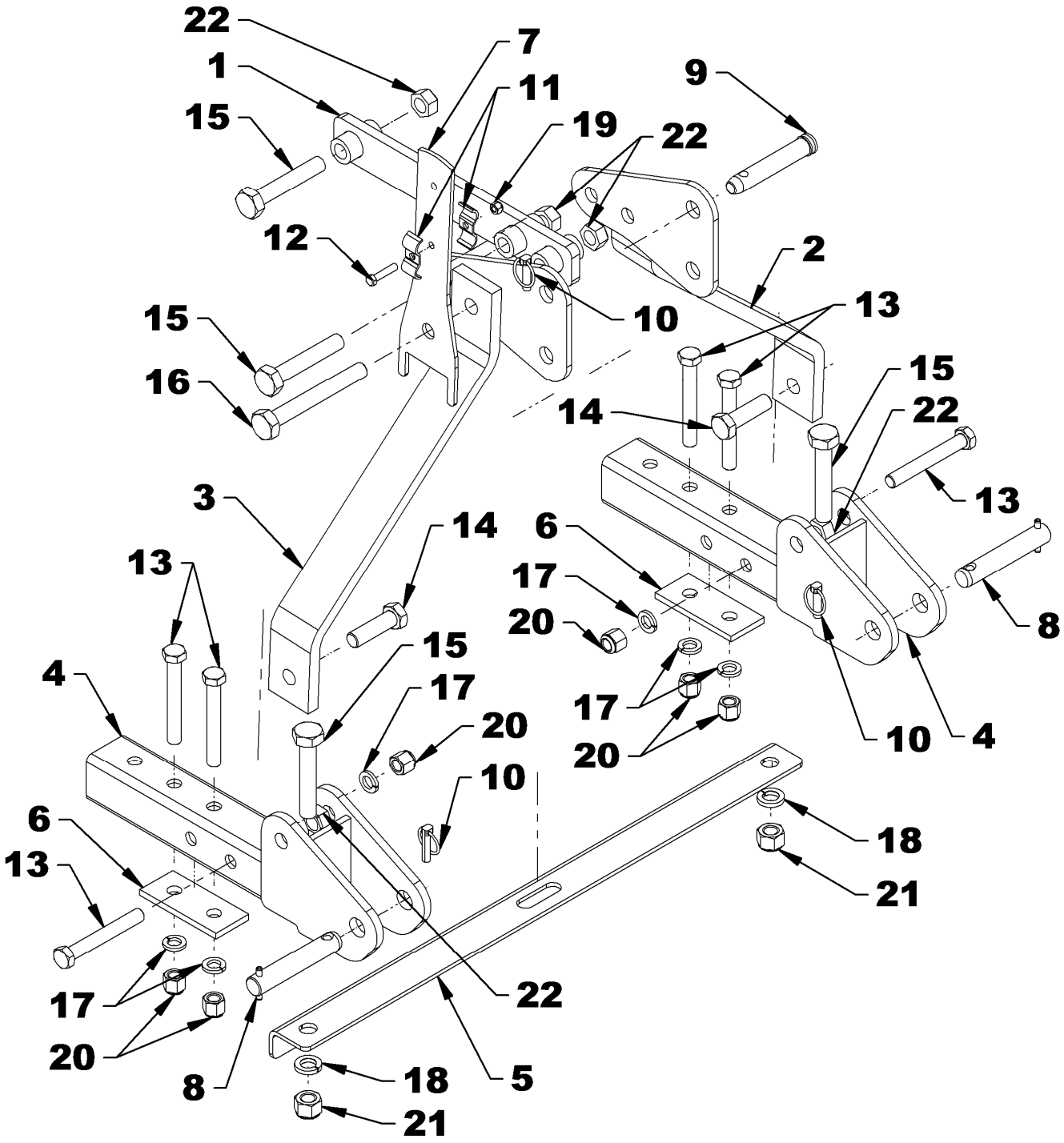

THREE POINT HITCH

REF.	DESCRIPTION	QTY	PART #
1	Upper hitch	1	670963
2	Hitch - RH	1	670961
3	Hitch - LH	1	670962
4	Lower hitch	2	670960
5	Brace	1	670939
6	Reinforcement plate	2	668117
7	Hose support	1	670938
8	Pin 1 1/8" x 6 1/4" lg Cat. 2	2	4600042
9	Pin 1" x 6 1/16" lg Cat. 2	1	4600052
10	Linchpin 7/16" PTD	3	1900003
11	Hose clamp	2	666583
12	Bolt hex 3/8"NC x 1 3/4", Gr.5 PTD	1	O/L
13	Bolt hex 3/4"NC x 5 1/2", Gr.5 PTD	6	O/L
14	Bolt hex 7/8"NC x 2 1/2", Gr.5 PTD	2	O/L
15	Bolt hex 7/8"NC x 5", Gr.5 PTD	4	O/L
16	Bolt hex 7/8"NC x 6", Gr.5 PTD	1	O/L
17	Lockwasher 3/4" PTD	6	O/L
18	Lockwasher 7/8" PTD	2	O/L
19	Nylon insert lock nut 3/8"NC PTD	1	O/L
20	Nylon insert lock nut 3/4"NC PTD	6	O/L
21	Nylon insert lock nut 7/8"NC PTD	2	O/L
22	Stover lock nut 7/8"NC PTD	5	O/L

HYDRAULIC ROTATION

REF.	DESCRIPTION	QTY	PART #
1	Hydraulic Motor 315cc with safety valve M+S	1	3910105
1A	- Safety valve (included with the motor 3910105)	1	3910100
	- Seal kit, O-Ring included	1	3910104
	- Key 1/4" x 1/4" x 1 1/4" (not shown)	1	654643
2	Bolt 8mm x 1.25mm x 25mm lg gr.5 PTD - for motor Eagle	1	O/L
	➢ Bolt 1/4"NC x 1", GR.5 PTD ➢ for motor M+S	1	O/L
3	Lockwasher 5/16" PTD - for motor Eagle	1	O/L
	➢ Lockwasher 1/4" PTD ➢ for motor M+S	1	O/L
4	Flat washer 5/16"(3/8" hole) PTD - for motor Eagle	1	O/L
	➢ Flat washer 1/4" (5/16" hole) PTD ➢ for motor M+S	1	O/L
5	Hose 3/8" X 80" rubber 1/2" NPT M x 9/16" JIC SWF	2	3700269
6	Quick coupler 1/2" NPT male	2	656480
7	Dust cap	2	664898
8	Gear shield	1	670895
9	Bolt 3/8"NC x 3/4", GR.5 PTD	4	O/L
10	Motor gear	1	665930
11	Lockwasher 3/8" PTD	4	O/L
12	Flow restrictor 1/8", 90° elbow 7/8"ORB M X 9/16"JIC M	2	3900502

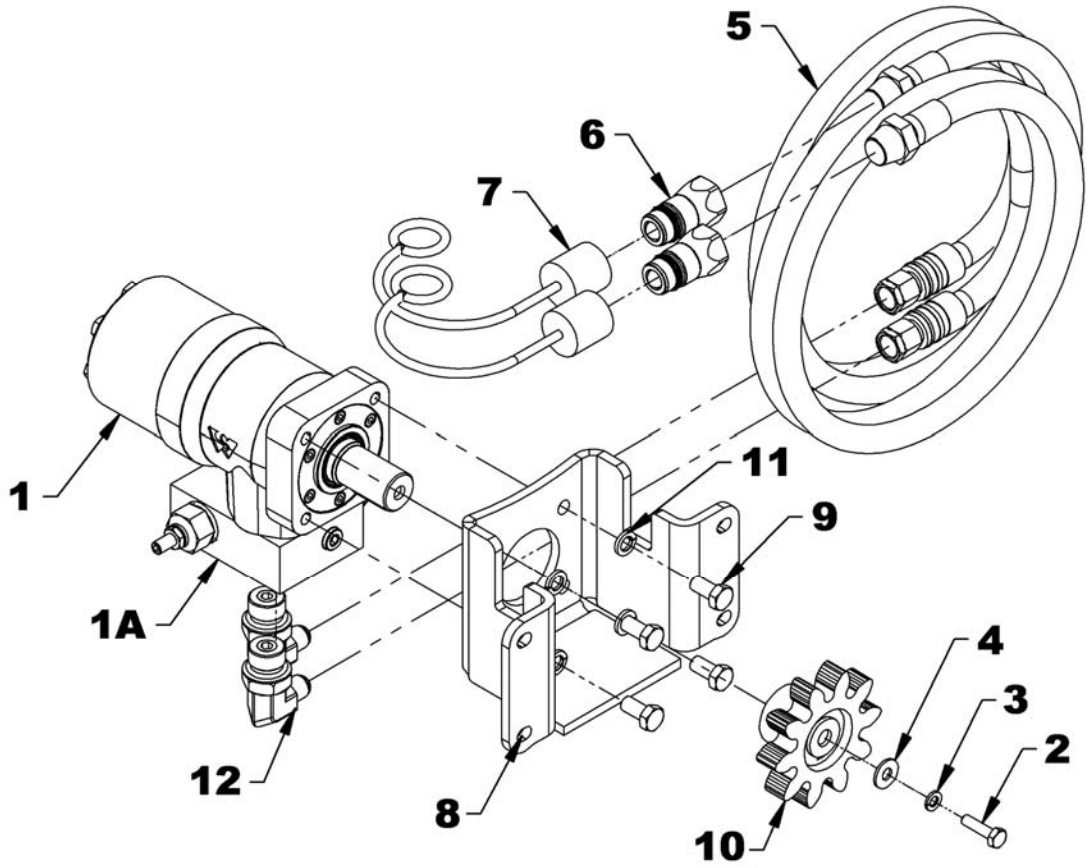

WORM GEAR BOX - IDENTIFIED COMER

REF.	DESCRIPTION	QTY	PART #
	Gear Box assembly	1	662195
1	Casing	1	656640
2	Seal kit 35 x 72 x 10	1	659845
3	External retaining ring	1	656652
4	Spacer	2	656649
5	Bearing flange	1	659844
6	Spacer	1	656648
7	Internal retaining ring	1	656654
8	Bearing flange	1	656647
9	Shaft	1	656651
10	Gear	1	656645
11	External retaining ring	1	656646
12	Bearing flange	2	656641
13	Spacer	1	656644
14	Internal retaining ring	2	656642
15	Seal kit 40 x 80 x 12	2	656643
16	Shaft	1	662212
17	Gear	1	656657
18	Spacer	1	661146
19	Plug	1	656662
20	Cover	1	656660
21	Bolt hex. M10 x 14 gr.8.8	4	656659
22	Plug 3/8" NPT	2	655259

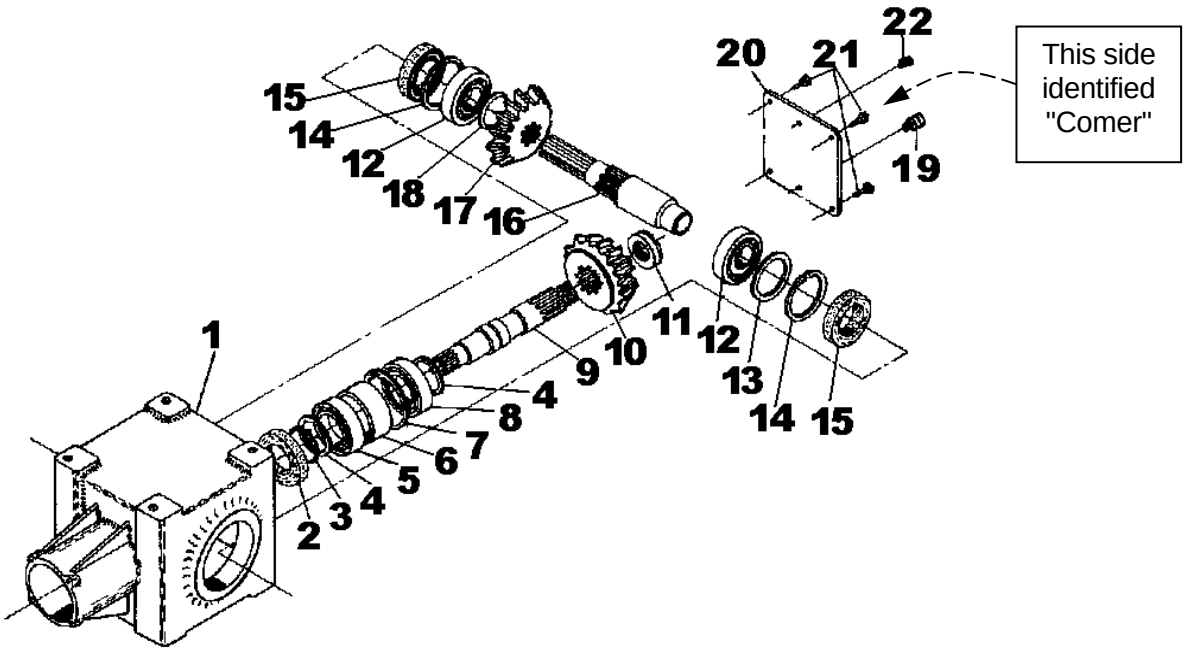

WORM GEAR BOX - IDENTIFIED 662195

REF.	DESCRIPTION	QTY	PART #
-	Gear Box assembly	1	662195
1	Seal kit 35 x 72 x 10	1	659845
2	Bearing	1	659844
3	Bearing	1	656647
4	Bearing	2	656641
5	Seal kit 40 x 80 x 10	2	4500170
6	Plug	1	4500169

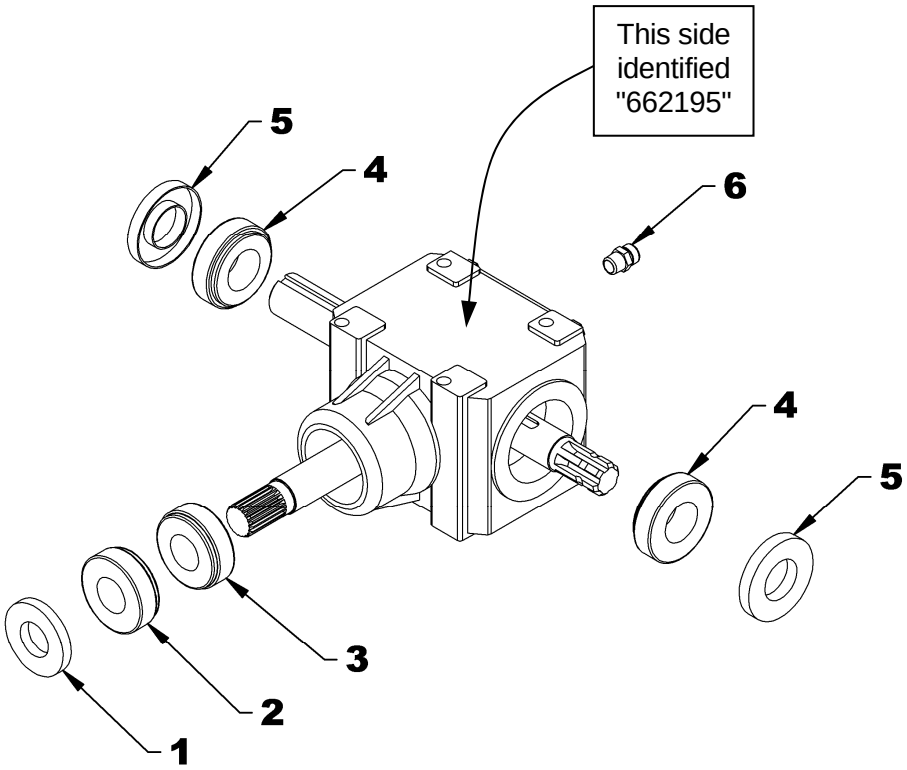

DRIVELINE - 662538

REF.	DESCRIPTION	QTY	PART #
1	Quick disconnect yoke assembly - slide collar	1	4700083
2	Universal joint kit	2	663134
3	Outer yoke	1	663136
4	Outer tube	1	663140
5	Inner tube	1	663142
6	Inner yoke	1	663144
7	Yoke and hub assembly	1	663145
8	Bolt and nut	2	662199
9	Grease fitting	1	663148
10	Ball	24	663162
11	Shear bolt and nut, M10 x 1.5 x 55 mm gr. 8.8 PTD	1	657199
12	Shields with safety chain	1	663150
13	Outer circlip	1	4700084
14	Sliding sleeve collar	1	4700085
15	Spring	1	4700086
16	Fixed sleeve	1	4700087
17	Ball 1/2"	3	4700088
18	Roll pin for outer tube	1	663138
19	Roll pin for inner tube	1	663143

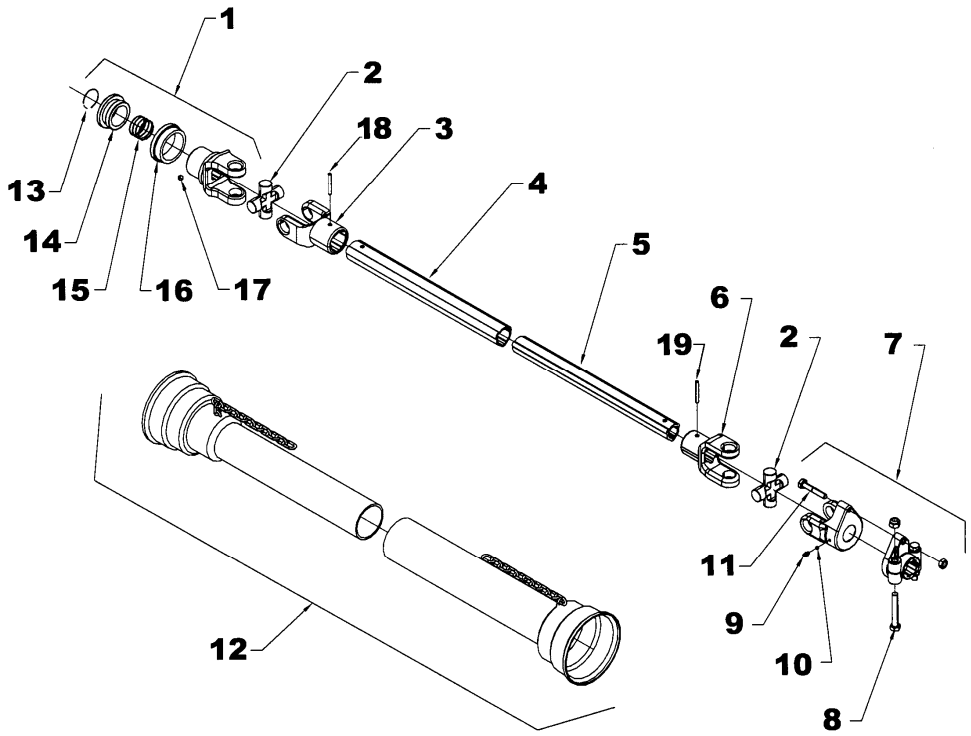

TWO PART CHUTE - BER0085

REF.	DESCRIPTION	QTY	PART #
1	Chute base	1	671009
2	Deflector	1	671008
3	Hinge pin	1	670884
4	Adjustment tube	1	654076
5	Adjustment rod	1	654074
6	Grease fitting 1/4" NF	3	654106
7	Stover lock nut 1/2"NC PTD	1	O/L
8	Cotter pin 1/4" x 2" PTD	2	O/L
9	Round wire lock pin 1/4" x 2"	1	1900006

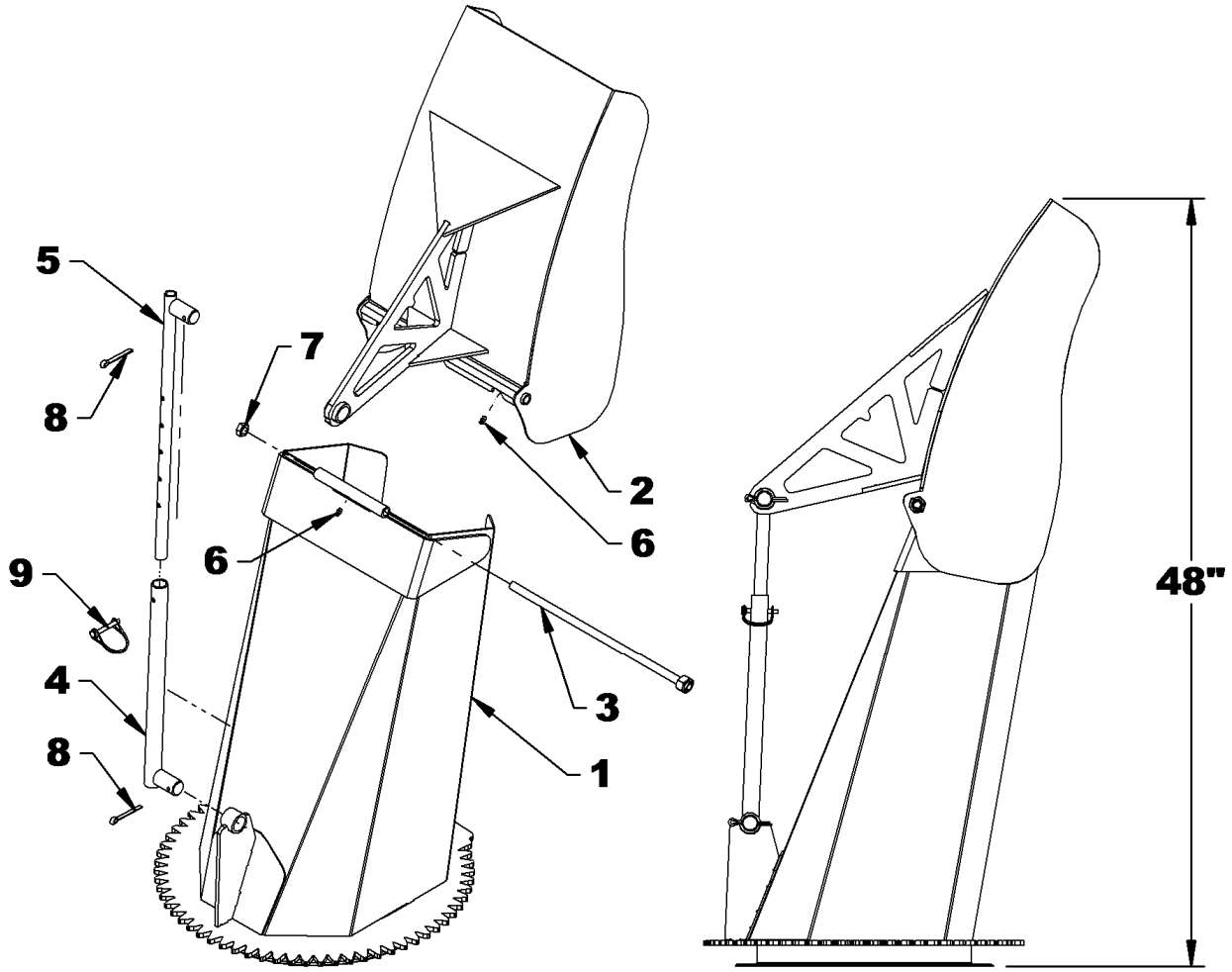

THREE PART CHUTE - BER0086

REF.	DESCRIPTION	QTY	PART #
1	Chute base	1	670880
2	Middle deflector	1	670881
3	Chute upper part	1	670882
4	Chute door	1	670984
5	Hinge pin	2	670884
6	Cylinder 2" x 8"	1	3900022
	- Seal kit	1	3900205
7	Flat bar	2	670985
8	Hose 3/8" x 140"	2	3700270
9	Quick coupler 1/2"NPT male	2	656480
10	Dust cap	2	664898
11	Flow restrictor, 90° elbow 3/8"NPT M x 3/8"NPT SWF	2	3900204
12	Plastic bushing	4	4300124
13	Flat washer 9/16" PTD	4	O/L
14	Cotter pin 1/8" x 1 1/4"	4	O/L
15	Stover lock nut 1/2"NC PTD	2	O/L
16	Grease fitting 1/4"NF	6	O/L
17	Bolt hex 3/8"NC x 1 1/2" Gr.5 PTD	2	O/L
18	Serrated flange bolt 5/16"NC x 1" Gr.5 PTD	2	O/L
19	Nylon insert lock nut 3/8"NC PTD	2	O/L
20	Serrated flange nut 5/16"NC PTD	2	O/L
21	Hose clamp - double	2	666583
22	Hose support	1	670948
23	Nylon tie wrap 1/4" x 15"	4	O/L

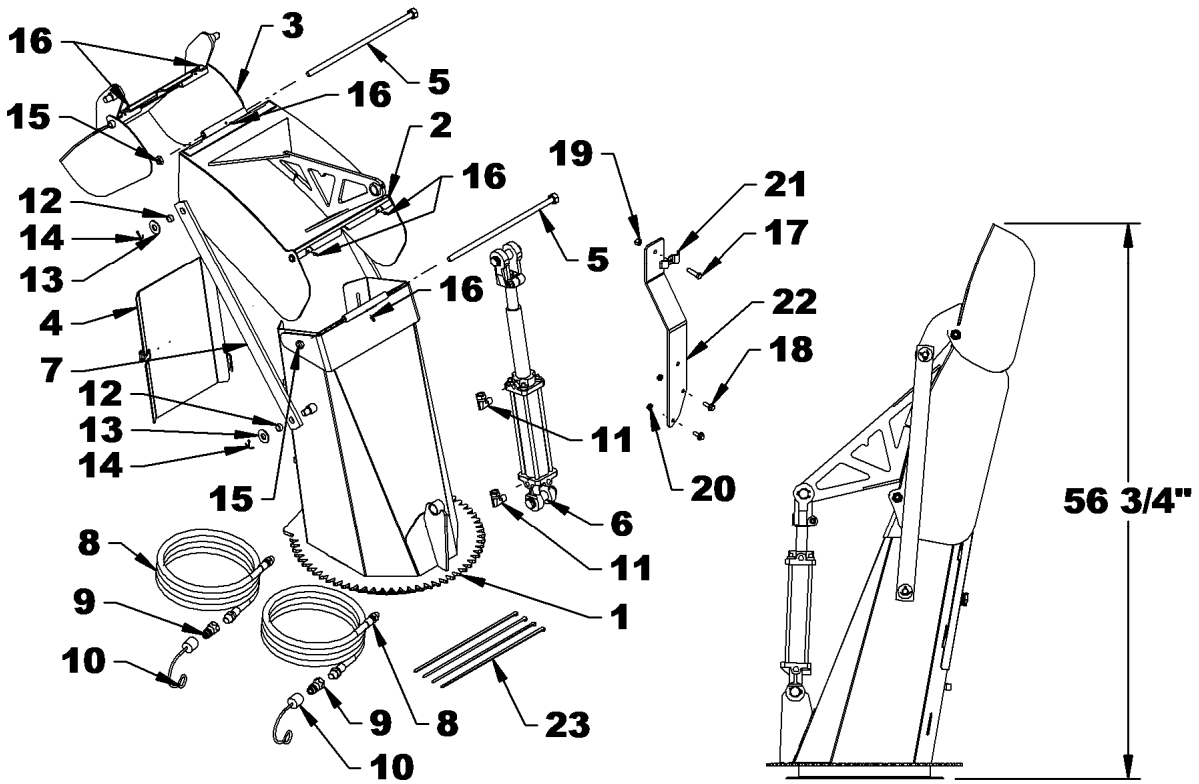

HYDRAULIC DEFLECTOR - BER0087

REF.	DESCRIPTION	QTY	PART #
1	Hose support	1	670948
2	Cylinder 2" x 8"	1	3900022
	- Seal kit	1	3900205
3	Flow restrictor, 90° elbow 3/8"NPT M x 3/8"NPT SWF	2	3900204
4	Hose 3/8" x 140"	2	3700270
5	Quick coupler 1/2"NPT male	2	656480
6	Dust cap	2	664898
7	Hose clamp - double	2	666583
8	Bolt hex 3/8"NC x 1 1/2" Gr.5 PTD	2	O/L
9	Serrated flange bolt 5/16"NC x 1" Gr.5 PTD	2	O/L
10	Serrated flange nut 5/16"NC PTD	2	O/L
11	Nylon insert lock nut 3/8"NC PTD	2	O/L
12	Nylon tie wrap 1/4" x 15"	4	O/L

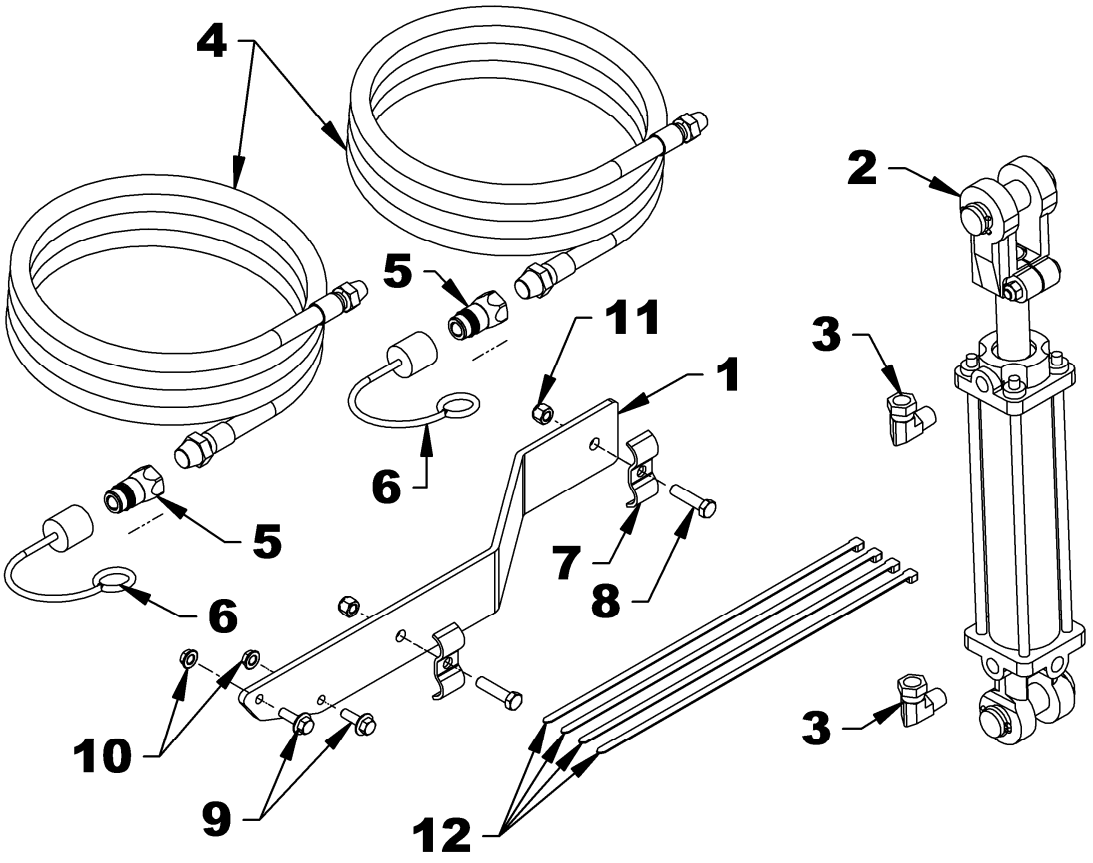

SECOND AUGER CONVERSION KIT - BER0102

REF.	DESCRIPTION	QTY	PART #
1	Upper auger	1	671043
2	Chain idler	1	655782
3	Chain guard	1	670980
4	Spacer 1/4" thick	1	671084
5	Sprocket #60A32, hole Ø1 1/4"	1	3300063
6	Sprocket #H60C15	1	665397
7	Sprocket #60A32, hole Ø1 1/4”	1	654167
8	Flange bearing 1 1/4" 4 holes	2	4300118
9	Chain #60 x 88 links & connecting link	1	3300059
10	Connecting link #60	1	654839
11	Bolt hex 1/2"NC x 1 1/4" PTD	3	O/L
12	Bolt hex 3/8"NC x 1 1/4" PTD	2	O/L
13	Bolt hex 3/8"NC x 1 1/2" PTD	8	O/L
14	Bolt hex 1/2"NC x 1 1/2" PTD	8	O/L
15	Carriage bolt 5/8” x 2 1/2” PTD	1	O/L
16	Lockwasher3/8" PTD	10	O/L
17	Lockwasher1/2" PTD	11	O/L
18	Flat washer5/8" PTD	1	O/L
19	Nut hex 3/8" NC PTD	2	O/L
20	Nut hex 1/2" NC PTD	11	O/L
21	Nylon insert lock nut 3/8"NC PTD	8	O/L
22	Nylon insert lock nut 5/8"NC PTD	1	O/L

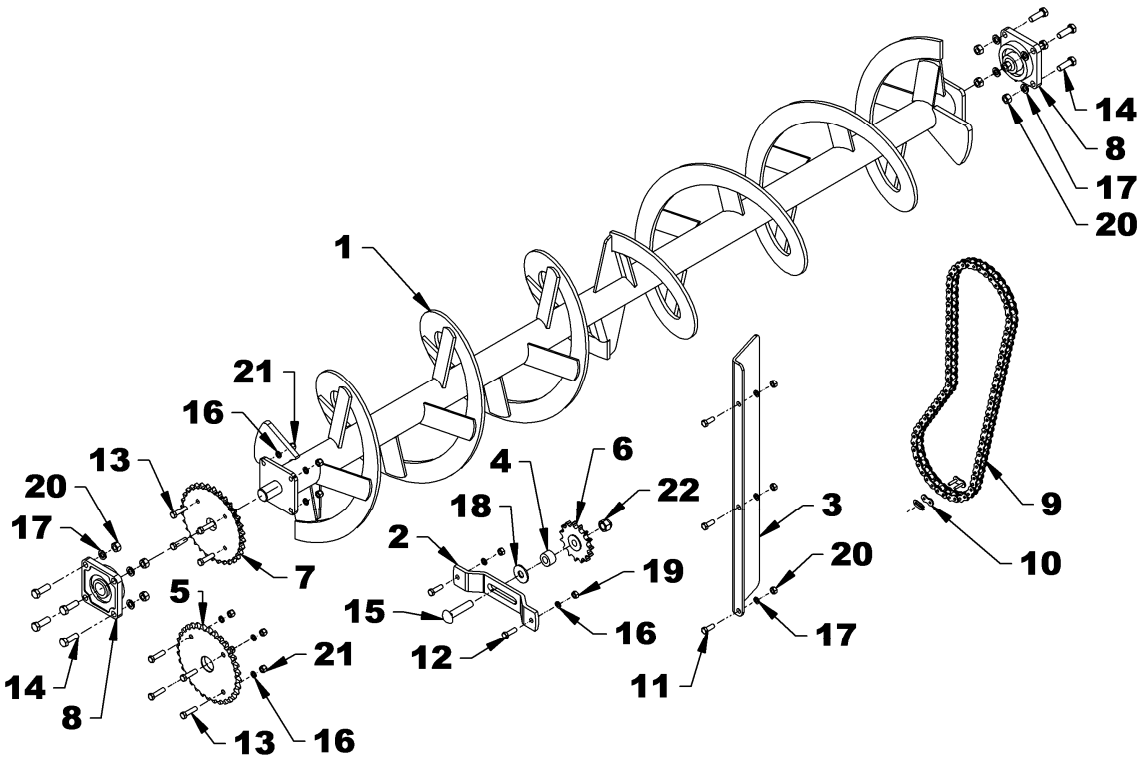

OTHER OPTIONS

DRIFT CUTTERS – STAINLESS SKID SHOES –CUTTING EDGES – SERRATED AUGER

REF.	DESCRIPTION	QTY	KIT# OR PART#
1-2	**DRIFT CUTTERS**	1	**BER0088**
3	Plow bolt 1/2"NC x 1 3/4" Gr.5 PTD (incl.in the kit)	8	0400030
4	Lockwasher 1/2" PTD (incl.in the kit)	8	O/L
5	Nut hex 1/2"NC PTD (incl.in the kit)	8	O/L
6	**STAINLESS SKID SHOES**	1	**BER0101**
7	**CUTTING EDGE - CHT400**	1	**BER0089**
8	**CUTTING EDGE – TIVAR**	1	**BER0093**
-	Lockwasher 7/16" PTD (incl.in the kit)	11	O/L
-	Nut hex 7/16"NC PTD (incl.in the kit)	11	O/L
9	**CUTTING EDGE – STAINLESS**	1	**BER0097**
10	**SERRATED AUGER**	1	**BER0106**

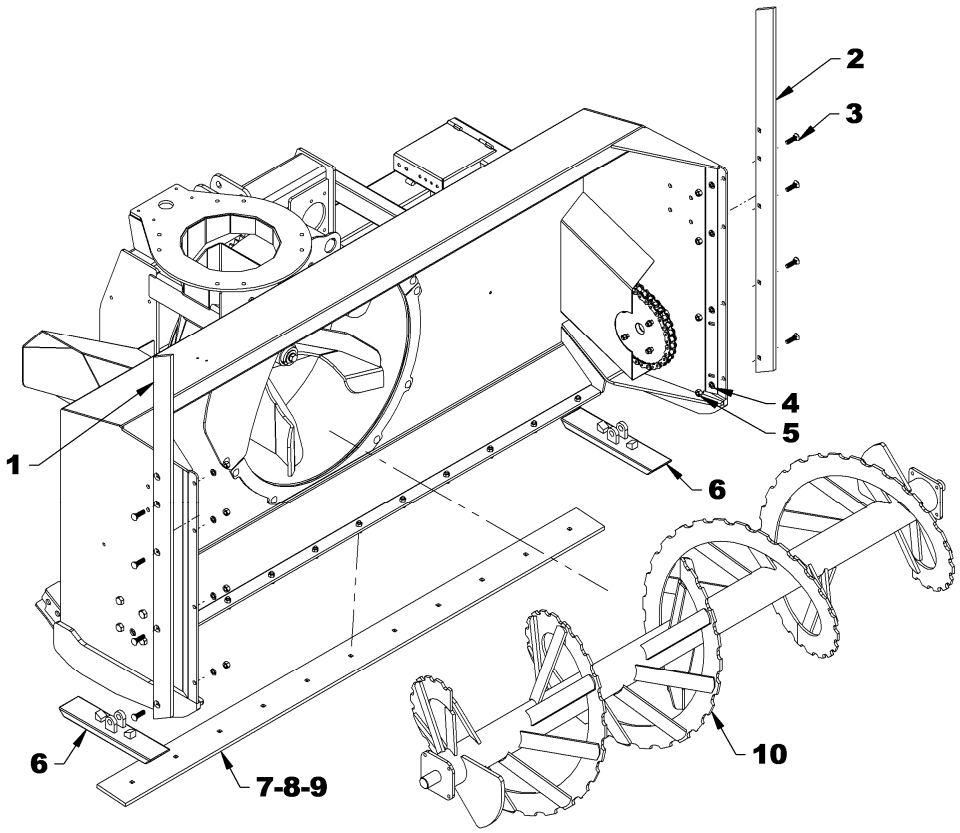

TORQUE SPECIFICATION TABLE

GENERAL SPECIFICATION TABLE

USE THE FOLLOWING TORQUES WHEN SPECIAL TORQUES ARE NOT GIVEN

Note: These values apply fasteners as received from supplier dry, or when lubricated with normal engine oil. They do not apply if special graphited or moly sidulphide greases or other extreme pressure lubricants are used. These values apply to dry conditions; under lubricated conditions reduce by 25% the torques in this table.

BOLT HEAD IDENTIFICATION

INCHES Bolt Size	Grade 2		Grade 5		Grade 8	
in-tpi [1]	N-m [2]	lbs-ft [3]	N-m	lbs-ft	N-m	lbs-ft
1/4" – 20NC	7.4	5.6	11	8	16	12
1/4" – 28NF	8.5	6	13	10	18	14
5/16" – 18NC	15	11	24	17	33	25
5/16" – 24NF	17	13	26	19	37	27
3/8" – 16NC	27	20	42	31	59	44
3/8" – 24NF	31	22	47	35	67	49
7/16" – 14NC	43	32	67	49	95	70
7/16" – 20NF	49	36	75	55	105	78
1/2" – 13NC	66	49	105	76	145	105
1/2" – 20NF	75	55	115	85	165	120
9/16" – 12NC	95	70	150	110	210	155
9/16" – 18NF	105	79	165	120	235	170
5/8" – 11NC	130	97	205	150	285	210
5/8" – 18NF	150	110	230	170	325	240
3/4" – 10NC	235	170	360	265	510	375
3/4" – 16NF	260	190	405	295	570	420
7/8" – 9NC	225	165	585	430	820	605
7/8" – 14NF	250	185	640	475	905	670
1" – 8NC	340	250	875	645	1230	910
1" – 12NF	370	275	955	705	1350	995
1 1/8" – 7NC	480	355	1080	795	1750	1290
1 1/8" – 12NF	540	395	1210	890	1960	1440
1 1/4" – 7NC	680	500	1520	1120	2460	1820
1 1/4" – 12NF	750	555	1680	1240	2730	2010
1 3/8" – 6NC	890	655	1990	1470	3230	2380
1 3/8" – 12NF	1010	745	2270	1670	3680	2710
1 1/2" – 6NC	1180	870	2640	1950	4290	3160
1 1/2" – 12NF	1330	980	2970	2190	4820	3560

METRIC Bolt Size	5.8 Class 5.8		8.8 Class 8.8		10.9 Class 10.9	
mm x pitch [4]	N-m	lbs-ft	N-m	lbs-ft	N-m	lbs-ft
M 5 X 0.8	4	3	6	5	9	7
M 6 X 1	7	5	11	8	15	11
M 8 X 1.25	17	12	26	19	36	27
M 8 X 1	18	13	28	21	39	29
M10 X 1.5	33	24	52	39	72	53
M10 X 0.75	39	29	61	45	85	62
M12 X 1.75	58	42	91	67	125	93
M12 X 1.5	60	44	95	70	130	97
M12 X 1	90	66	105	77	145	105
M14 X 2	92	68	145	105	200	150
M14 X 1.5	99	73	155	115	215	160
M16 X 2	145	105	225	165	315	230
M16 X 1.5	155	115	240	180	335	245
M18 X 2.5	195	145	310	230	405	300
M18 X 1.5	220	165	350	260	485	355
M20 X 2.5	280	205	440	325	610	450
M20 X 1.5	310	230	650	480	900	665
M24 X 3	480	355	760	560	1050	780
M24 X 2	525	390	830	610	1150	845
M30 X 3.5	960	705	1510	1120	2100	1550
M30 X 2	1060	785	1680	1240	2320	1710
M36 X 3.5	1730	1270	2650	1950	3660	2700
M36 X 2	1880	1380	2960	2190	4100	3220

[1] in-tpi = nominal thread diameter in inches-threads per inch
[2] N-m = newton-meters
[3] lbs-ft= pounds-foot
[4] mm x pitch = nominal thread diameter in millimeters x thread Pitch

*Torque tolerance +0%, -15% of torquing values. Unless otherwise specified use torque values listed above

Manufactured by:

Dalkotech Group

RAD Technologies Inc.
2835, Chemin de l'Aéroport
Thetford Mines, Québec, Canada, G6G 5R7

T +1 418 338-4499 - F +1 418 338-2522

info@radtech.ca
radtech.ca

Printed in Canada